USER MANUAL

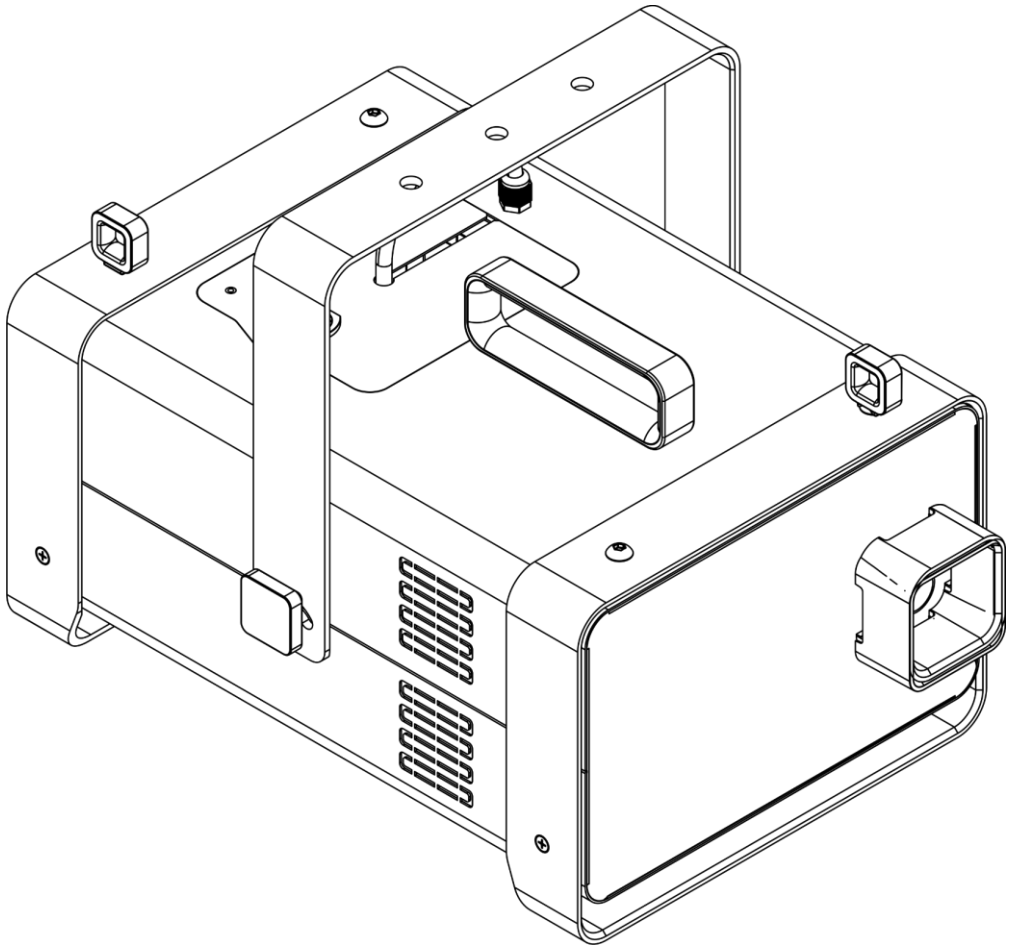

ENGLISH

QubiQ S2500 V1

Product code: 61062

Highlite International B.V. – Vestastraat 2 – 6468 EX – Kerkrade – the Netherlands

Preface

Thank you for purchasing this Showtec product.

The purpose of this user manual is to provide instructions for the correct and safe use of this product.

Keep the user manual for future reference as it is an integral part of the product. The user manual shall be stored at an easily accessible location.

This user manual contains information concerning:

- Safety instructions
- Installation and operation of the device
- Intended and non-intended use of the device
- Maintenance procedures
- Troubleshooting
- Transport, storage and disposal of the device

Non-observance of the instructions in this user manual may result in serious injuries and damage of property.

©2022 Showtec. All rights reserved.

No part of this document may be copied, published or otherwise reproduced without the prior written consent of Highlite International.

Design and product specifications are subject to change without prior notice.

For the latest version of this document or other language versions, please visit our website www.highlite.com or contact us at service@highlite.com.

Highlite International and its authorized service providers are not liable for any injury, damage, direct or indirect loss, consequential or economic loss or any other loss arising from the use of, or inability to use or reliance on the information contained in this document.

Table of contents

1. Introduction 4
1.1. Before Using the Product 4
1.2. Intended Use 4
1.3. Product Lifespan 4
1.4. Text Conventions 4
1.5. Symbols and Signal Words 5
1.6. Symbols on the Information Label 5

2. Safety 6
2.1. Warnings and Safety Instructions 6
2.2. Requirements for the User 9

3. Description of the Device 10
3.1. Front View 10
3.2. Back View 11
3.3. Remote Control 12
3.4. Product Specifications 13
3.5. Dimensions 14

4. Installation 15
4.1. Safety Instructions for Installation 15
4.2. Personal Protective Equipment 15
4.3. Installation Site Requirements 15
4.4. Rigging 15
4.5. Connecting to Power Supply 17
4.6. Power Linking of Multiple Devices 17

5. Setup 18
5.1. Warnings and Precautions 18
5.2. Stand-alone Setup 18
5.3. DMX Connection 18
5.3.1. DMX-512 Protocol 18
5.3.2. DMX Cables 19
5.3.3. DMX Linking 19
5.3.4. DMX Addressing 20

6. Operation 21
6.1. Safety Instructions for Operation 21
6.2. Recommended Fog Fluid 21
6.3. Filling the Tank 22
6.4. Emptying the Tank after Operation 25
6.5. Restarting the Device after Running the Tank empty 28
6.6. Control Modes 28
6.7. Manual Operation 29
6.7.1. Control Panel (Device) 29
6.7.2. Start-up 30
6.7.3. Menu Overview (Device) 31
6.7.4. Main Menu Options (Device) 32
6.7.4.1. DMX Address 32
6.7.4.2. Output Volume 32
6.7.4.3. Interval 32
6.7.4.4. Duration 33
6.7.4.5. Fluid Sensor 33
6.7.4.6. Restore Default 33
6.7.4.7. About 33
6.8. Manual Operation with Remote Control 34
6.8.1. Remote Control 35
6.8.2. Start up (Remote Control) 35

6.8.3. Main Menu (Remote Control) 36
6.8.4. Menu Overview (Remote Control) 36
6.8.4.1. Setup 37
6.8.4.2. Output Volume 38
6.8.4.3. Duration 38
6.8.4.4. Interval 38
6.8.4.5. Save 38
6.8.4.6. Continuous Output 39
6.8.4.7. Timer / Interval 39
6.8.4.8. Manual Output 39
6.9. DMX Operation 40
6.9.1. DMX Channels 40

7. Troubleshooting 41

8. Maintenance 42
8.1. Safety Instructions for Maintenance 42
8.2. Preventive Maintenance 42
8.2.1. Basic Cleaning Instructions 43
8.2.2. Cleaning the Fluid Pipes 43
8.3. Corrective Maintenance 44
8.3.1. Replacing the Fuse 44

9. Deinstallation, Transportation and Storage 45
9.1. Instructions for Deinstallation 45
9.2. Instructions for Transportation 45
9.3. Storage 45

10. Disposal 45

11. Approval 45

1. Introduction

1.1. Before Using the Product

Important
Read and follow the instructions in this user manual before installing, operating or servicing this product.

The manufacturer will not accept liability for any resulting damages caused by the non-observance of this manual.

After unpacking, check the contents of the box. If any parts are missing or damaged, contact your Highlite International dealer.

Your shipment includes:

- Showtec QubiQ S2500
- Remote control
- 2 x safety eye
- Schuko to pro power cable (1,1m)
- User manual

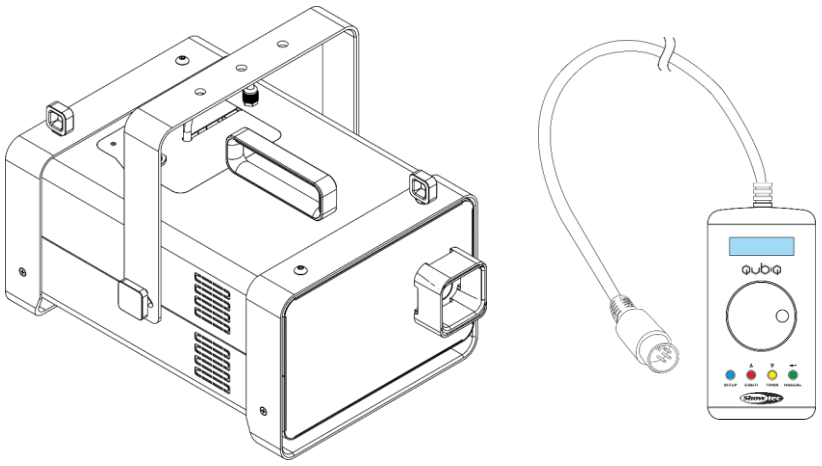

Fig. 01

1.2. Intended Use

This device is designed to be used as a professional fog effect. Any incorrect use may lead to hazardous situations and result in injuries and material damage. This device is not suitable for households.

Any other use, not mentioned under intended use, is regarded as non-intended and incorrect use.

1.3. Product Lifespan

This device is not designed for permanent operation. Disconnect the device from the electrical power supply when the device is not in operation. This will reduce the wear and will improve the device's lifespan.

1.4. Text Conventions

Throughout the user manual the following text conventions are used:

- Buttons: All buttons are in bold lettering, for example "Press the **UP/DOWN** buttons"
- References: References to chapters and parts of the device are in bold lettering, for example: "Refer to **2. Safety**", "turn the **adjustment screw (02)**"
- 0–255: Defines a range of values
- Notes: **Note:** (in bold lettering) is followed by useful information or tips

1.5. Symbols and Signal Words

Safety notes and warnings are indicated throughout the user manual by safety signs.

Always follow the instructions provided in this user manual.



DANGER Indicates an imminently hazardous situation which, if not avoided, will result in death or serious injury.



WARNING Indicates a potentially hazardous situation which, if not avoided, could result in death or serious injury.



CAUTION Indicates a potentially hazardous situation, which, if not avoided, may result in minor or moderate injury.



Attention Indicates important information for the correct operation and use of the product.



Important Read and observe the instructions in this document.



Electrical hazard



Hot surface



Eye damage hazard



Provides important information about the disposal of this product.

1.6. Symbols on the Information Label

This product is provided with an information label. The information label is located on the backside of the device.

The information label contains the following symbols:



This device is designed for indoor use.



This device shall not be treated as household waste.



This device falls under IEC protection class I.

2. Safety



Important
Read and follow the instructions in this user manual before installing, operating or servicing this product.

The manufacturer will not accept liability for any resulting damages caused by the non-observance of this manual.

2.1. Warnings and Safety Instructions



DANGER
Danger for children

For adult use only. The device must be installed beyond the reach of children.

- Do not leave various parts of the packaging (plastic bags, polystyrene foam, nails, etc.) within children's reach. Packaging material is a potential source of danger for children.



DANGER
Electric shock caused by dangerous voltage inside

There are areas within the device where dangerous touch voltage (> 120 V DC) may be present.

- Do not open the device or remove any covers.
- Do not operate the device if the covers or the housing are open. Before operation, check if the housing is firmly closed and all screws are tightly fastened.
- Disconnect the device from electrical power supply before service and maintenance, and when the device is not in use.



DANGER
Electric shock caused by short-circuit

This device falls under IEC protection class I.

- Make sure that the device is electrically connected to ground (earth). Connect the device only to a socket-outlet with ground (earth) connection.
- Do not cover the ground (earth) connection.
- Do not bypass the thermostatic switch or fuses.
- For replacement use fuses of the same type and rating only.
- Do not let the power cable come into contact with other cables. Handle the power cable and all connections with the mains with caution.
- Do not modify, bend, mechanically strain, put pressure on, pull or heat up the power cable.
- Make sure that the power cable is not crimped or damaged. Examine the power cable periodically for any defects.
- Do not immerse the device in water or other liquids. Do not install the device in a location where flooding may occur.
- Do not use the device during thunderstorms. Disconnect the device from the electrical power supply immediately.



WARNING
Risk of burns due to hot surface

The fog output nozzle becomes very hot during operation.

- Do not touch the fog output nozzle during operation or shortly after use.
- Allow the device cool down for several hours before servicing or maintenance.



WARNING
Risk of burns due to hot fluid

The fog produced by the device is very hot. Also very hot droplets of fluid can escape from the fog output nozzle during operation of the device.

- Do not point the fog output directly at persons or animals.
- Make sure that persons cannot come closer than 50 cm to the fog output nozzle.



WARNING
Risk of explosion caused by incorrect handling

- Do not add flammable liquids such as perfume and alcohol to the fog fluid.
- Operate the device only with the fluids recommended in this user manual.



CAUTION
Risk of health problems

- Operate the device only with the fluids recommended in this user manual. Other fluids may contain substances, which are hazardous for human health and environment.
- Always refer to the Safety Data Sheet (SDS) of the fluid before to use.
- Do not swallow the fluid.
- Do not point the fog output at face height.
- Make sure that you use the device in spaces that have good airflow.

Persons, who suffer from respiratory disorders, should avoid prolonged exposure to artificially produced atmospheric effects.



Attention
Risk of fire

- Do not point the fog output at flames.
- Keep flammable and heat-sensitive objects at a minimum distance of 50 cm from the fog output nozzle.
- Do not cover the air vents.
- Make sure that there is sufficient airflow around the device.

Attention
Power supply

- Before connecting the device to the power supply, make sure that the current, voltage and frequency match the input voltage, current and frequency specified on the information label on the device.
- Make sure that the cross-sectional area of the extension cords and power cables is sufficient for the required power consumption of the device.

Attention
General safety

- Do not operate the device without liquid.
- Do not point the fog output at smooth floors. The fog output can cause condensation, which can make the floor slippery.
- Do not insert objects into the air vents.
- Do not switch the device on and off in short intervals. This decreases the device's life.
- Do not shake the device. Avoid brute force when installing or operating the device.
- If the device is dropped or struck, disconnect the device from the electrical power supply immediately.
- If the device is exposed to extreme temperature variations (e.g. after transportation), do not switch it on immediately. Let the device reach room temperature before switching it on, otherwise it may be damaged by the formed condensation.
- If the device fails to work properly, discontinue the use immediately.

Attention
For professional use only
This device shall be used only for the purposes it is designed for.

This device is designed to be used as a professional fog effect. Any incorrect use may lead to hazardous situations and result in injuries and material damage.

- This device is not suitable for households.
- This device is not designed for permanent operation.
- This device does not contain user-serviceable parts. Unauthorized modifications to the device will render the warranty void. Such modifications may result in injuries and material damage.

Attention
Before each use, examine the device visually for any defects.

Make sure that:

- The fluid tank is closed.
- All screws used for installing the device or parts of the device are tightly fastened and are not corroded.
- The safety devices are not damaged.
- There are no deformations on housings, fixations and installation points.
- The power cables are not damaged and do not show any material fatigue.



Attention
Do not expose the device to conditions that exceed the rated IP class conditions.

This device is IP20 rated. IP (Ingress Protection) 20 class provides protection against solid objects greater than 12 mm, such as fingers, and no protection against harmful ingress of water.

2.2. Requirements for the User

This product may be used by ordinary persons. Maintenance may be carried by ordinary persons. Installation and service shall be carried out only by instructed or skilled persons. Contact your Highlite dealer for more information.

Instructed persons have been instructed and trained by a skilled person, or are supervised by a skilled person, for specific tasks and work activities associated with the installation, service and maintenance of this product, so that they can identify risks and take precautions to avoid them.

Skilled persons have training or experience, which enables them to recognize risks and to avoid hazards associated with the installation, service and maintenance of this product.

Ordinary persons are all persons other than instructed persons and skilled persons. Ordinary persons include not only users of the product but also any other persons that may have access to the device or who may be in the vicinity of the device.

3. Description of the Device

The Showtec QubiQ S2500 is a professional 2500 W Smoke Machine. This fogger is reliable, safe and feature-rich. In addition, it has a practical and nice looking design. It will be your best smoking friend at small to large venues.

The smoke intensity is seamlessly adjustable from 0–100 %. Not only can you control the fogger manually, but also via DMX or included timer remote control.

The QubiQ S2500 is reliable since it can provide a continuous output and it has a comprehensive security. It has an accurate and reliable temperature control (double over temperature protection), as well as a sensor to know when the liquid is almost empty.

3.1. Front View

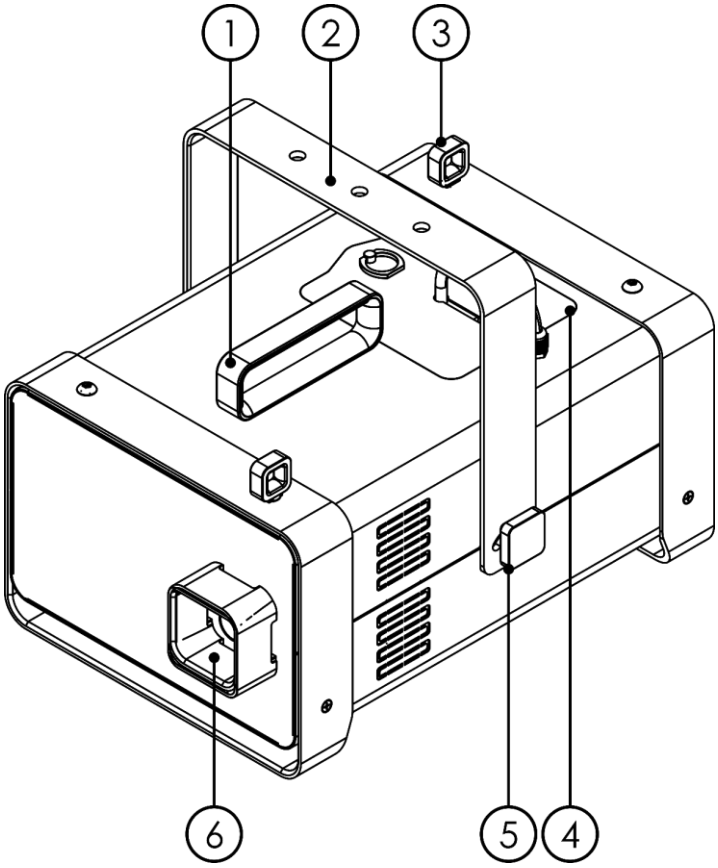

Fig. 02

01) Carrying handle
02) Bracket
03) Safety eye
04) 2,3 L tank
05) Adjustment screw
06) Fog output nozzle

3.2. Back View

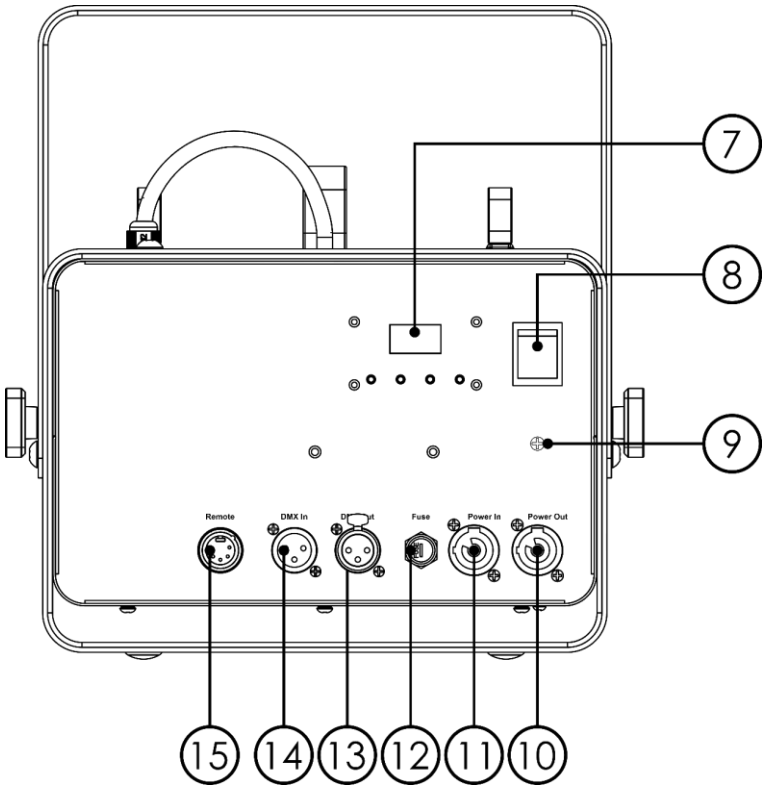

Fig. 03

07) LED display with Menu buttons
08) ON / OFF
09) Ground/earth connection
10) Pro power connector (Gray) OUT
11) Pro power connector (Blue) IN
12) Fuse F15AL / 250 V
13) 3-pin DMX signal connector OUT
14) 3-pin DMX signal connector IN
15) 5-pin DIN Remote control connector

3.3. Remote Control

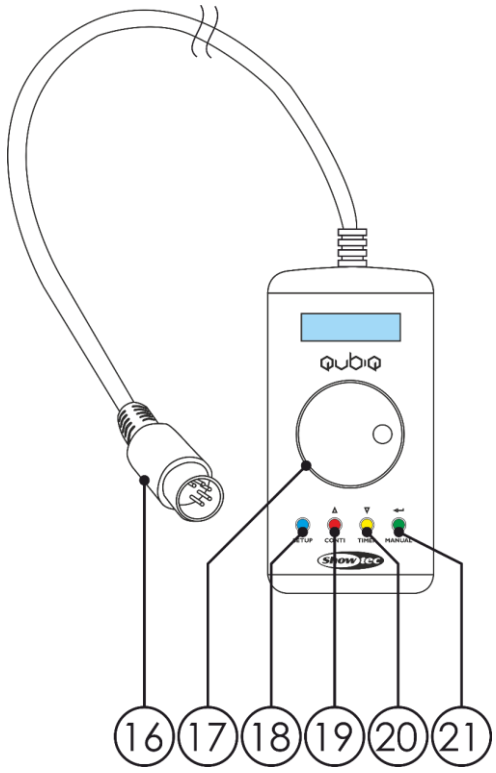

Fig. 04

16) Special 5-pin connector with 3,5 m cable
17) Control Wheel
18) Blue SETUP Button
19) Red PLUS / CONTI
20) Yellow MINUS / TIMER Button
21) Green ENTER / MANUAL Button

3.4. Product Specifications

Model:	QubiQ S2500

Electrical:	
Input voltage:	240 V AC, 50/60 Hz
Power consumption:	2500 W
Fuse:	F15AL / 250 V

Physical:	
Dimensions:	450 x 324 x 332 mm (LxWxH)
Weight:	11,8 kg

Fogger capacity:	
Heater:	2500 W
Warm-up / Heating time:	4,5 minutes
Tank capacity:	2,3 L
Adjustable output level:	0–100 %
Safety:	Reliable and safe due to temperature protection and liquid sensor
	Continuous and steady output till tank runs out of liquid
Operation and control:	
Control:	DMX-512, Manual, Remote, Timer
DMX channels:	1 channel
Control panel:	LED display and buttons

Connections:	
Power connections:	Pro power connectors (Blue) IN/(Gray) OUT
Data connections:	3-pin DMX connectors IN/OUT
Signal pinouts:	3-pin: pin 1 (ground), pin 2 (-), pin 3 (+)
Remote control connection:	5-pin DIN connector

Construction:	
Housing:	Aluminum / Metal
Color:	Black
IP rating:	IP20
Cooling:	Convection

Thermal:	
Minimum Ambient Temperature t_a:	0 °C
Maximum ambient temperature t_a:	40 °C
Maximum housing temperature t_c:	70 °C

Minimum distance:	
Minimum distance from flammable surfaces:	0,8 m

3.5. Dimensions

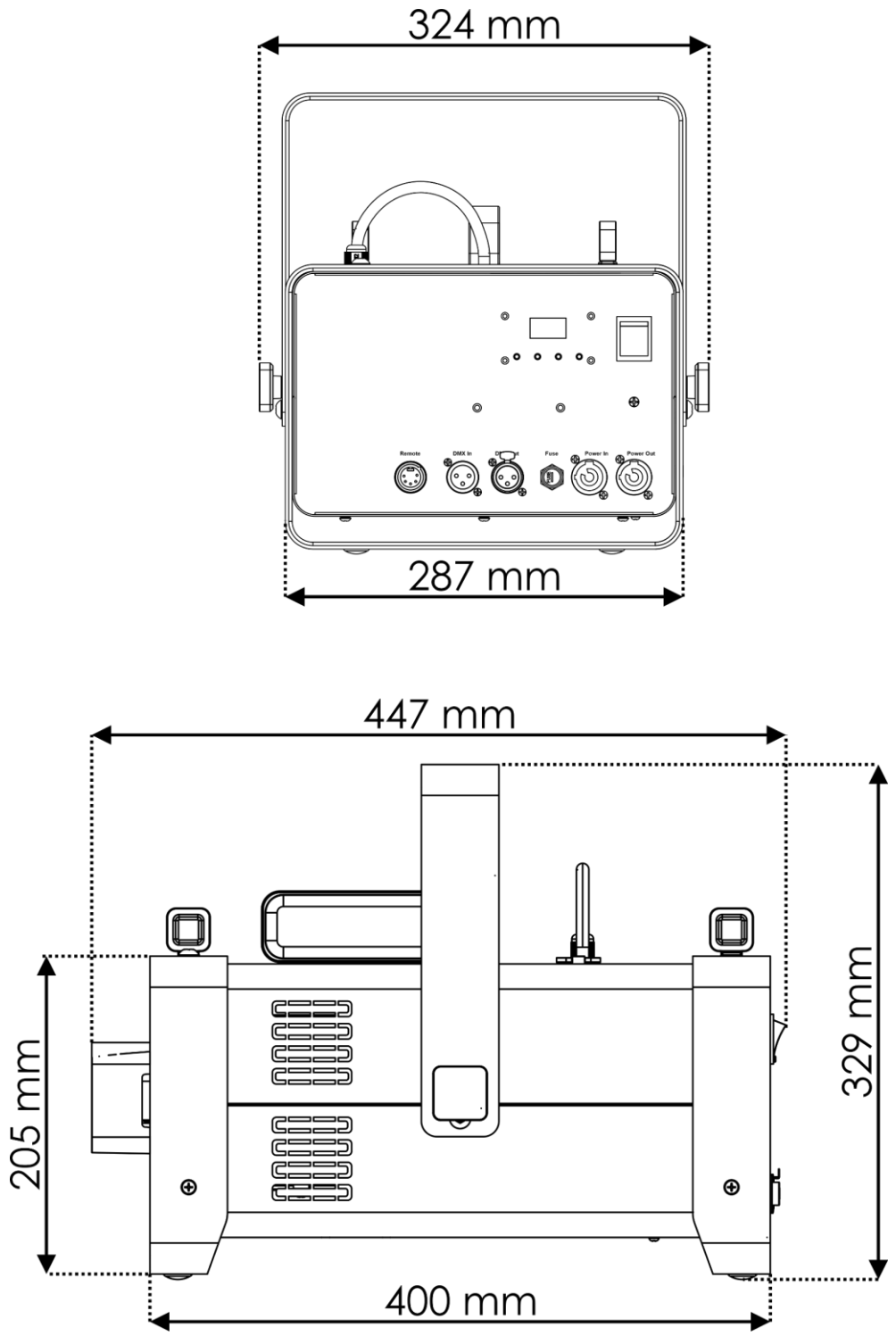

Fig. 05

4. Installation

4.1. Safety Instructions for Installation



WARNING
Incorrect installation can cause serious injuries and damage of property.

If trussing systems are used, installation must be carried out only by instructed or skilled persons.

Follow all applicable European, national and local safety regulations concerning rigging and trussing.

4.2. Personal Protective Equipment

During installation and rigging wear personal protective equipment in compliance with the national and site-specific regulations.

4.3. Installation Site Requirements

- The device can be used only indoors.
- The device can be mounted to a truss or other rigging structure in any orientation.
- The minimum distance to other objects must be bigger than 0,8 m.
- The minimum distance between the light output and the illuminated surface must be bigger than 0,8 m.
- The maximum ambient temperature ta = 40 °C must never be exceeded.
- The relative humidity must not exceed 50 % with an ambient temperature of 40 °C.

4.4. Rigging

The device can be positioned on a flat surface or mounted to a truss or other rigging structure in a horizontal orientation. The maximum inclination angle of the device should not exceed 15°. Make sure that all loads are within the pre-determined limits of the supporting structure.



CAUTION
Restrict the access under the work area during rigging and/or derigging.

To mount the device, follow the steps below:

01) Use a clamp to attach the device to the supporting structure, as shown in Fig. 06. Make sure that the device cannot move freely.
02) Secure the device with a secondary suspension, for example a safety cable. Make sure that the secondary suspension can hold 10 times the weight of the device. If possible, the secondary suspension should be attached to a supporting structure independent of the primary suspension. Put the safety cable through the **safety eye (03)**, as shown in Fig. 06.

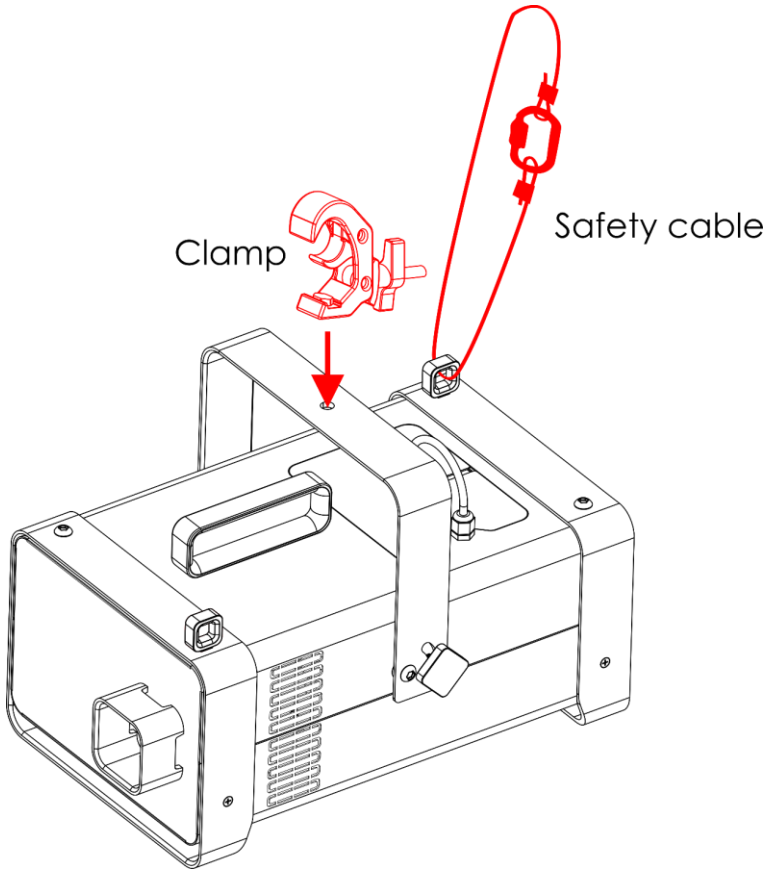

Fig. 06

4.5. Connecting to Power Supply



DANGER
Electric shock caused by short-circuit

The device accepts AC mains power at 240 V and 50/60 Hz. Do not supply power at any other voltage or frequency to the device.

This device falls under IEC protection class I. Make sure that the device is always electrically connected to the ground (earth).

Before connecting the device to the socket-outlet:
- Make sure that the power supply matches the input voltage specified on the information label on the device.
- Make sure that the socket-outlet has ground (earth) connection.

Connect the device to the socket-outlet with a power plug. Do not connect the device to a dimmer pack, as this may damage the device.

4.6. Power Linking of Multiple Devices

This device supports power linking. Power can be relayed to another device via the power OUT connector. Note that the input and the output connectors have different designs: one type cannot be connected to the other.

Power linking of multiple devices must be carried out only by instructed or skilled persons.



WARNING
Incorrect power linking may lead to overload of the electrical circuit and result in serious injuries and damage of property.

To prevent overload of the electrical circuit, when power linking multiple devices:

- Use cables with sufficient current-carrying capacity. The power cable supplied with the device is not suitable for power linking of multiple devices.
- Make sure that the total current draw of the device and all connected devices does not exceed the rated capacity of the power cables and the circuit breaker.
- Do not link more devices on one power link than the maximum recommended number.

Maximum recommended number of devices:
- at 220–240 V: 3 devices

5. Setup

5.1. Warnings and Precautions



Attention
Connect all data cables before supplying power.
Disconnect power supply before connecting or disconnecting data cables.

5.2. Stand-alone Setup

When the QubiQ S2500 is not connected to a controller or to other devices, it functions as a stand-alone device. It can be operated manually.

For more information about the control mode, refer to **6.7.4.1. DMX Address** on page 32.

5.3. DMX Connection

5.3.1. DMX-512 Protocol

You need a DMX serial data link to run fog shows of one or more devices using a DMX-512 controller or to run synchronized shows of two or more devices set in a DMX mode.

The QubiQ S2500 has 3-pin DMX signal IN and OUT connectors.

The pin assignment is as follows:
- 3-pin: pin 1 (ground), pin 2 (-), pin 3 (+)

Devices on a serial data link must be daisy-chained in a single line. The number of devices that you can control on one data link is limited by the combined number of the DMX channels of the connected devices and the 512 channels available in one DMX universe.

To comply with the TIA-485 standard, no more than 32 devices should be connected on one data link. In order to connect more than 32 devices on one data link, you must use a DMX optically isolated splitter/booster, otherwise this may result in deterioration of the DMX signal.

Note:
- Maximum recommended DMX data link distance: 300 m
- Maximum recommended number of devices on a DMX data link: 32 devices

5.3.2. DMX Cables

Shielded twisted-pair cables with 3-pin XLR connectors must be used for reliable DMX connection. You can purchase DMX cables directly from your Highlite International dealer or make your own cables.

If you use 3-pin XLR audio cables for DMX data transmission, this may lead to signal degradation and unreliable operation of the DMX network.

When you make your own DMX cables, make sure that you connect the pins and wires correctly as shown in Fig. 07.

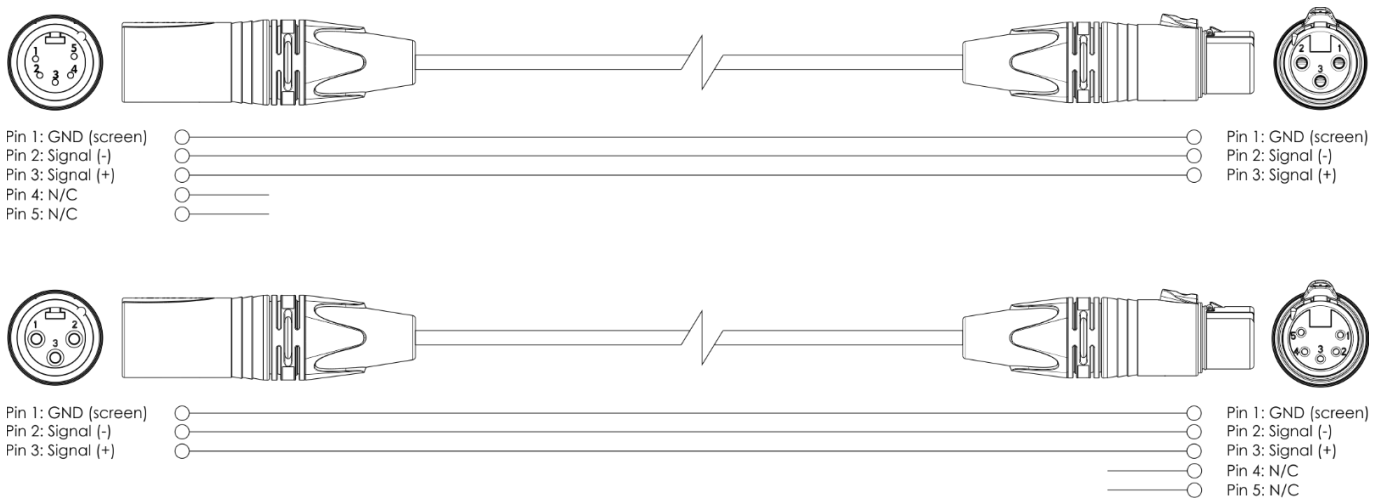

Fig. 07

5.3.3. DMX Linking

To connect multiple devices on one DMX data link, follow the steps below:

01) Use a 3-pin DMX cable to connect the DMX OUT connector of the lighting controller to the DMX IN connector of the first device.
02) Connect the first device's DMX OUT connector to the second device's DMX IN connector with a 3-pin DMX cable.
03) Repeat step 2 to connect all devices in a daisy-chain as shown in Fig. 08.
04) Connect a DMX terminator (120 Ω resistor) to the DMX OUT connector of the last device on the data link.

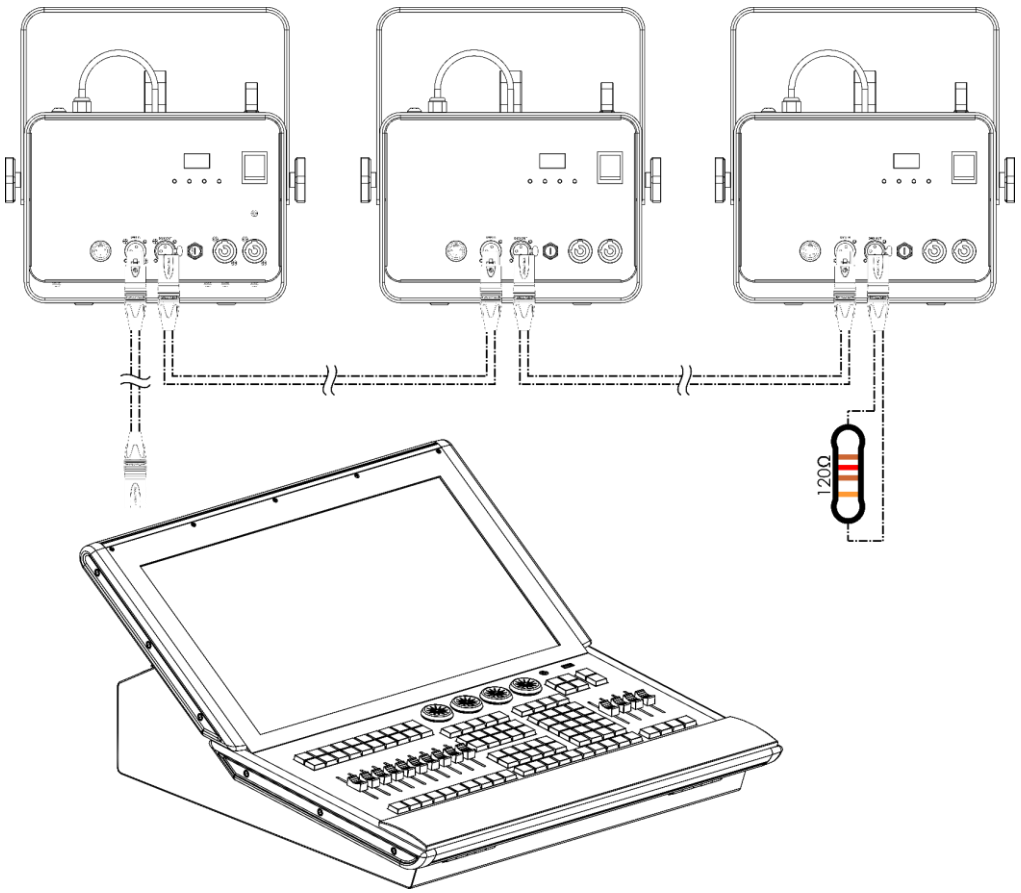

Fig. 08

5.3.4. DMX Addressing

In a setup with multiple devices, make sure that you set the DMX starting address of each device correctly. The QubiQ S2500 has 1 personality: 1 channel.

If you want to connect multiple devices on one data link and use them in 1-channel mode, for example, follow the steps below:

01) Set the starting address of the 1st device on the data link to 1 (001).
02) Set the starting address of the 2nd device on the data link to 2 (002), as 1 + 1 = 2.
03) Set the starting address of the 3rd device on the data link to 3 (003) as 2 + 1 = 3.
04) Continue assigning the starting addresses of the remaining devices by adding each time 1 to the previous number.

Make sure that you do not have any overlapping channels in order to control each QubiQ S2500 correctly. If two or more devices are addressed similarly, they will work similarly.

6. Operation

6.1. Safety Instructions for Operation



Attention
This device must be used only for the purposes it is designed for.

This device is designed to be used as a professional fog effect. Any incorrect use may lead to hazardous situations and result in injuries and material damage. This device is not suitable for households.

Any other use, not mentioned under intended use, is regarded as non-intended and incorrect use.



Attention
Power supply

Before connecting the device to the power supply, make sure that the current, voltage and frequency match the input voltage, current and frequency specified on the information label on the device.

6.2. Recommended Fog Fluid

It is recommended to operate the device with the following fog fluids. Other fog liquids may cause poor effect or damage the device.

- Product code: 60590 – Antari Smoke fluid 5 L Light version FLR-5
- Product code: 60595 – Antari Smoke fluid 5 L Heavy version FLG-5
- Product code: 60603 – Showgear Fog Fluid 5 L
- Product code: 60637 – Showgear Fog fluid 5 L High density

6.3. Filling the Tank

WARNING
Risk of explosion caused by incorrect handling

- Do not add flammable liquids such as perfume and alcohol to the fog fluid.
- Operate the device only with the fluids recommended in this user manual.
- Make sure that you do not to exceed the maximum fluid level. Do not overfill!

To fill the tank, follow the steps below:

01) Lift the small ring on top of the device to open the service lid, as shown in Fig. 09.
02) Open the service lid, as shown in Fig. 10.

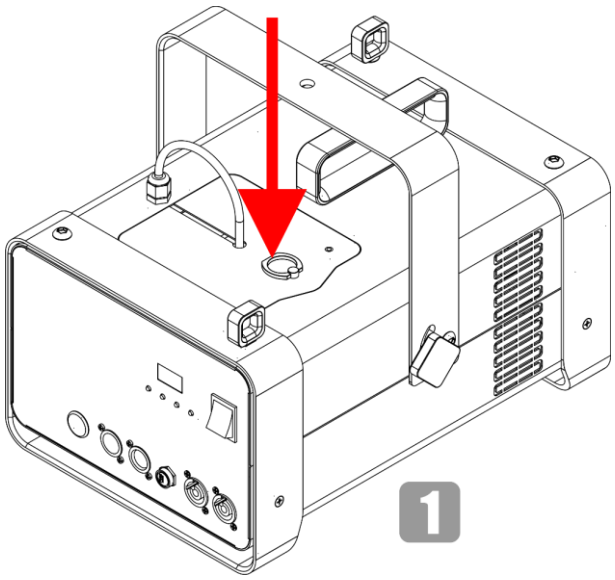

Fig. 09

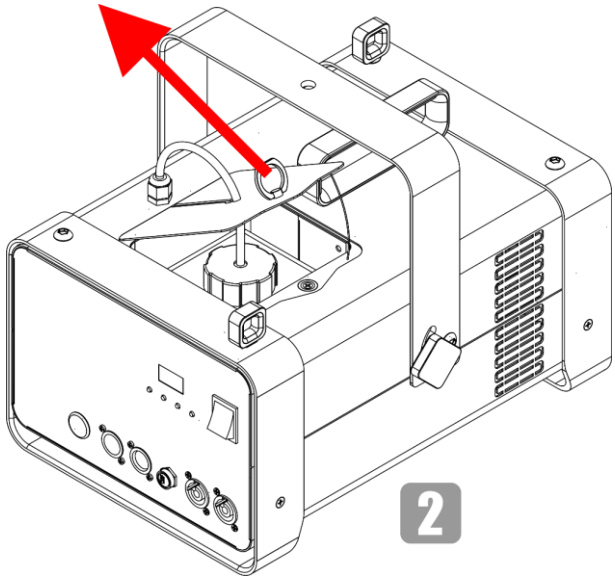

Fig. 10

03) Remove the service lid, as shown in Fig. 11.
04) Place the service lid next to the device, as shown in Fig. 12.

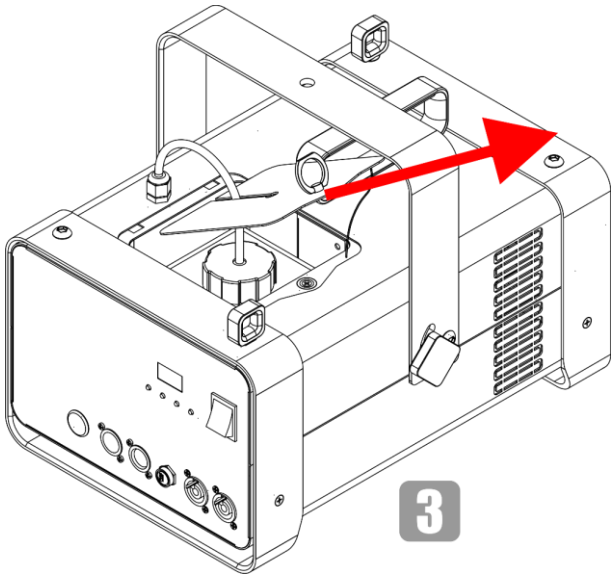

Fig. 11

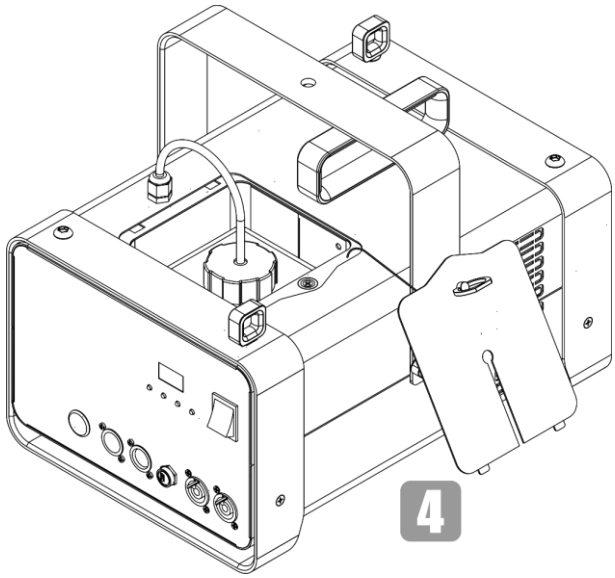

Fig. 12

05) Do not disconnect the safety cable.
06) Unscrew the lid on the fluid tank, as shown in Fig. 13.
07) Take out the fluid tank, as shown in Fig. 14.

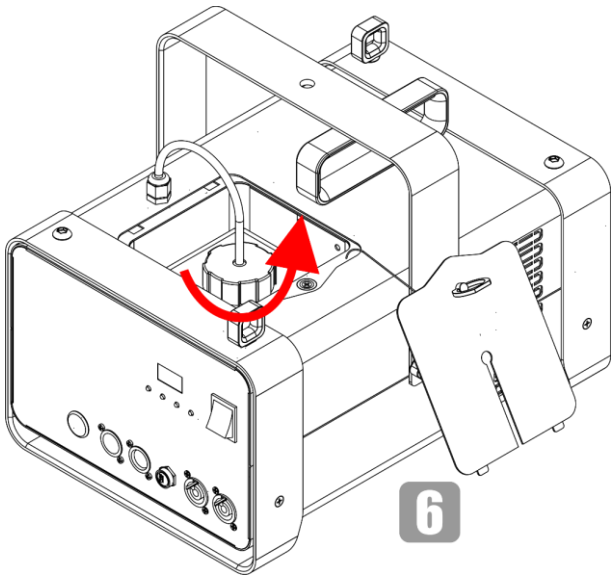

Fig. 13

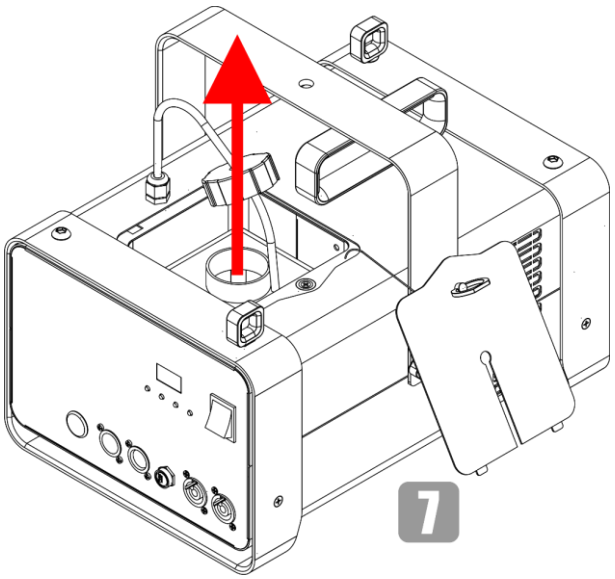

Fig. 14

08) Place the fluid tank on a flat surface near the device, as shown in Fig. 15.
09) Use a funnel to pour the fog fluid into the tank, as shown in Fig. 16.

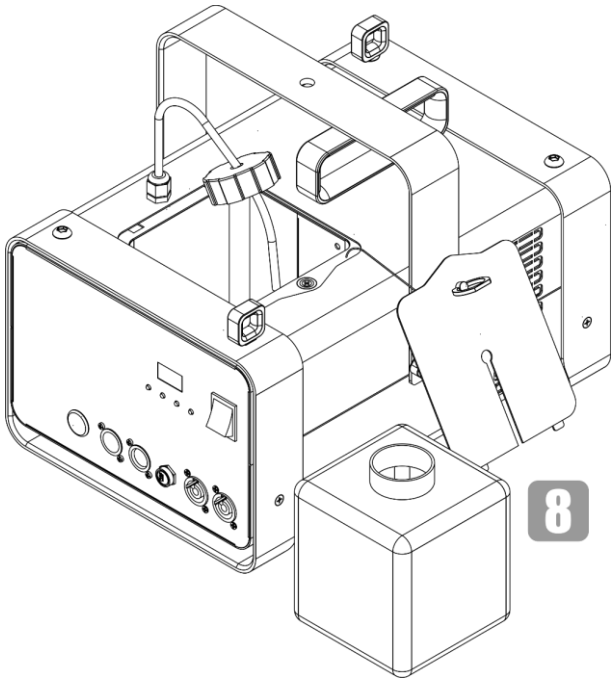

Fig. 15

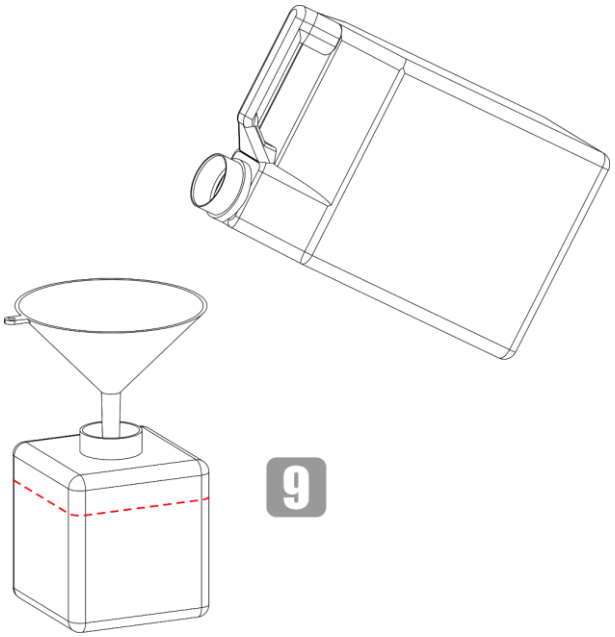

Fig. 16

10) Fill the fluid container with the recommended fog fluid (Max. Fluid Tank Capacity 2,3 L). Make sure that you do not overfill. See Fig. 16 for more information.

11) Put the fluid tank back in the device, as shown in Fig. 17.
12) Screw the lid back on the fluid tank, as shown in Fig. 18.

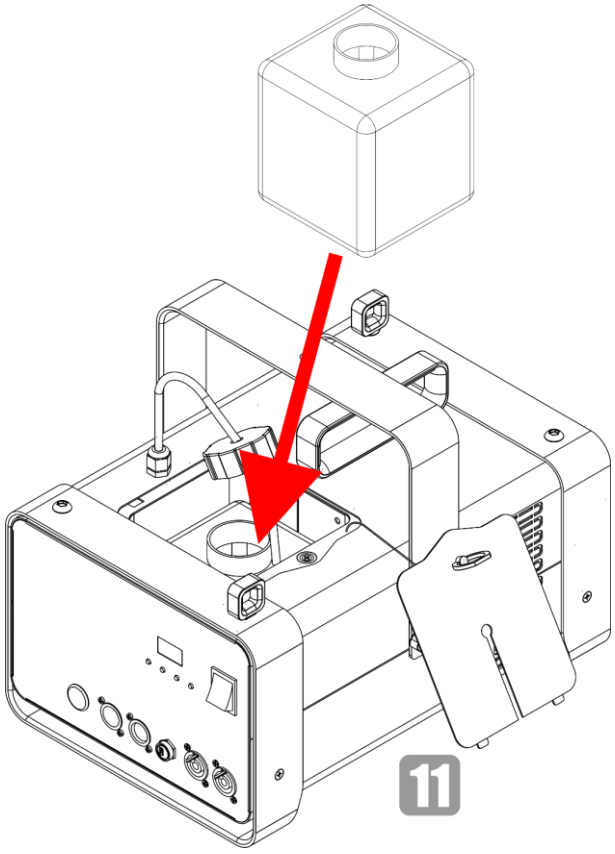

Fig. 17

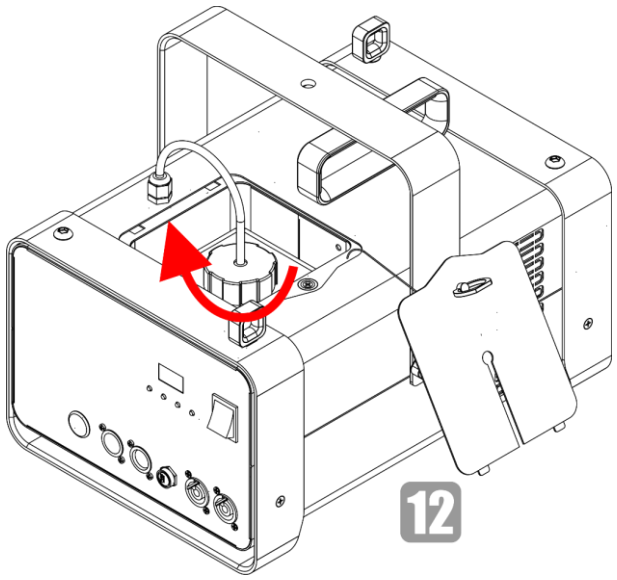

Fig. 18

13) Put the lid back on the device, as shown in Fig. 19.
14) Close the service lid, as shown in Fig. 20.

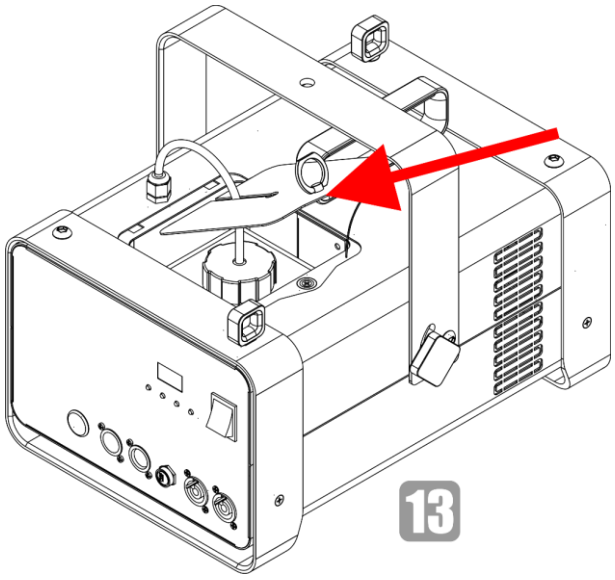

Fig. 19

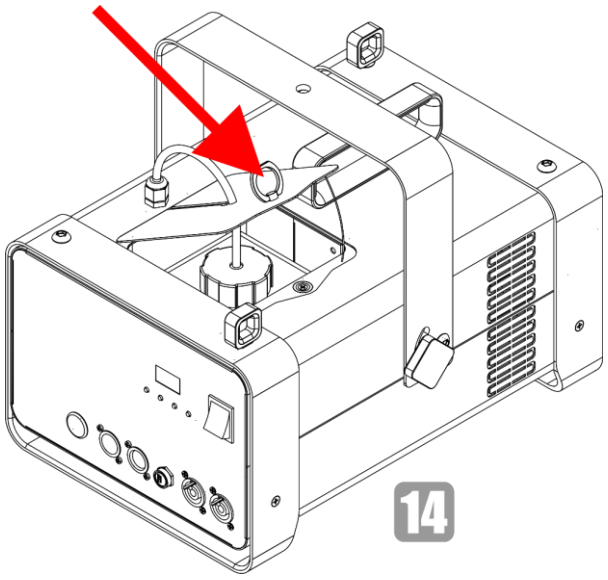

Fig. 20

15) Wait for the device to heat up. This will take a maximum of 3 minutes.

Notes:

- Do not allow the fog liquid to become contaminated. Always replace the caps on the fog liquid container and the fog machine liquid tank immediately after filling.

6.4. Emptying the Tank after Operation

To empty the tank, follow the steps below:

01) Lift the small ring on top of the device to open the service lid, as shown in Fig. 21.
02) Open the service lid, as shown in Fig. 22.

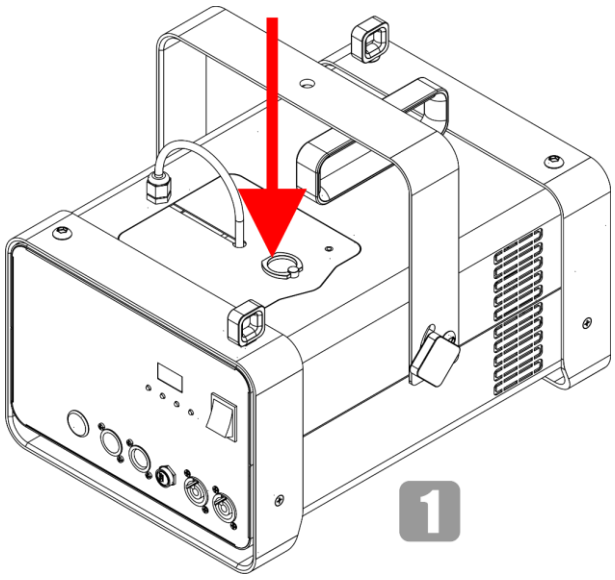

Fig. 21

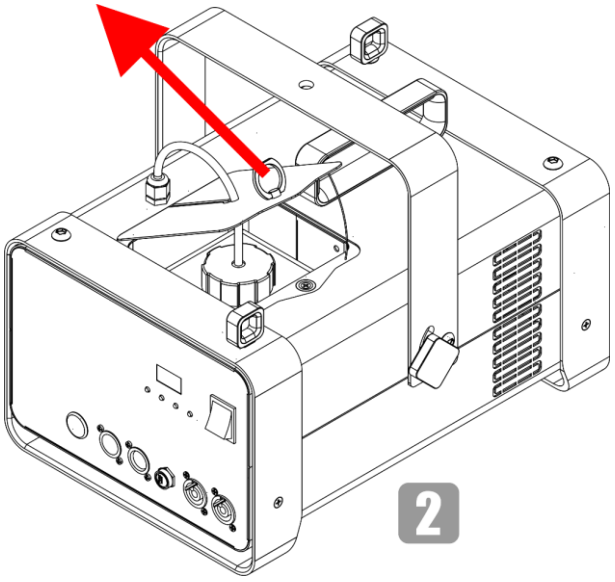

Fig. 22

03) Remove the service lid, as shown in Fig. 23.
04) Place the service lid next to the device, as shown in Fig. 24.

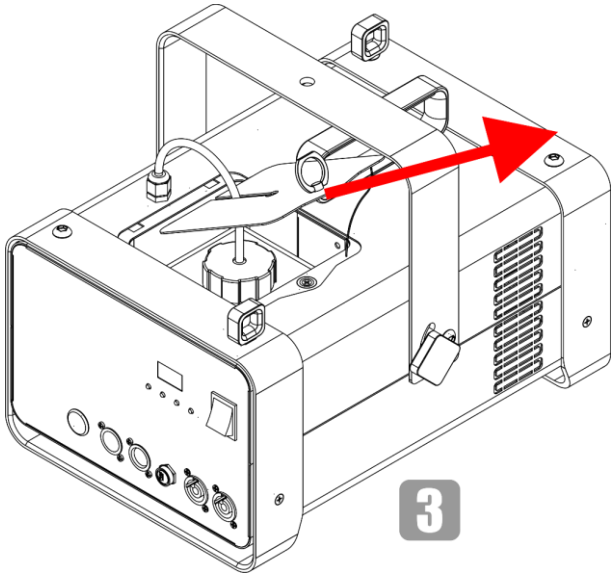

Fig. 23

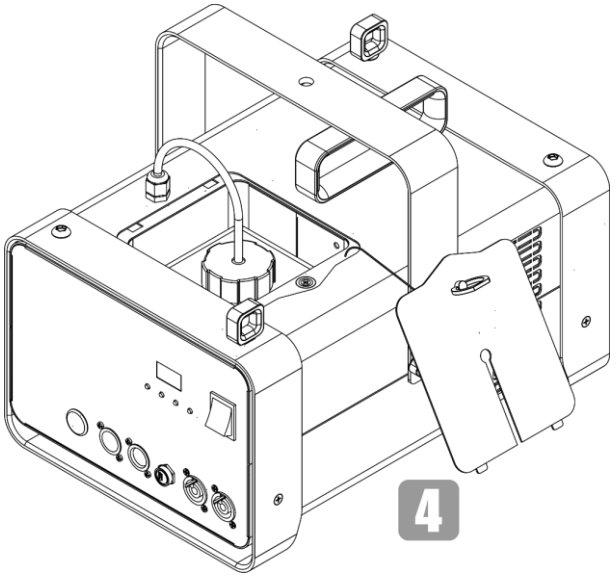

Fig. 24

05) Do not disconnect the safety cable.
06) Unscrew the lid on the fluid tank, as shown in Fig. 25.
07) Take out the fluid tank, as shown in Fig. 26.

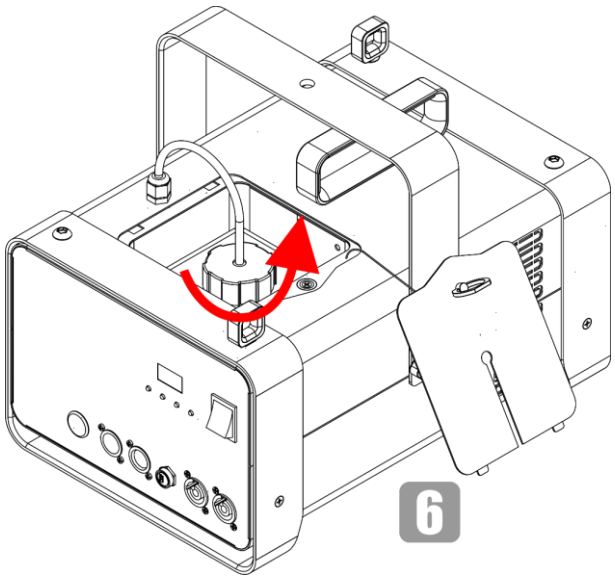

Fig. 25

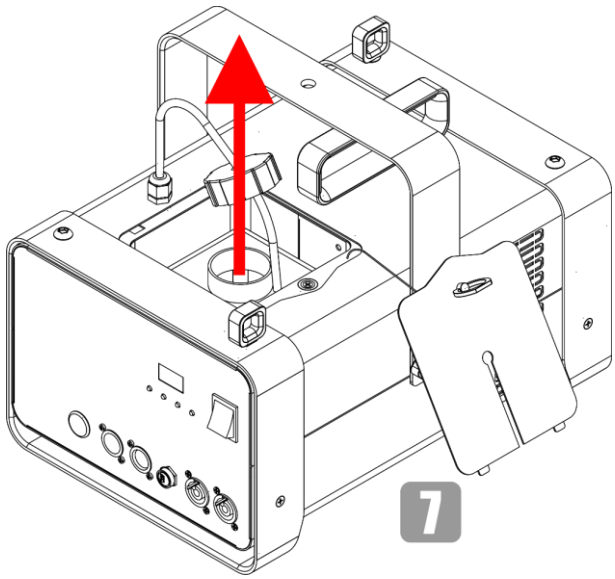

Fig. 26

08) Place the fluid tank on a flat service near the device, as shown in Fig. 27.
09) Use a funnel to pour the fog fluid from the tank into original fog fluid jerry can, as shown in Fig. 28.

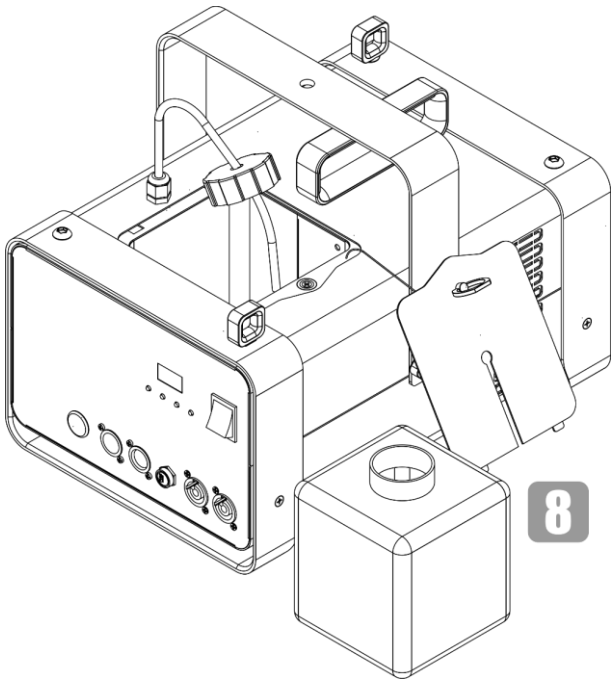

Fig. 27

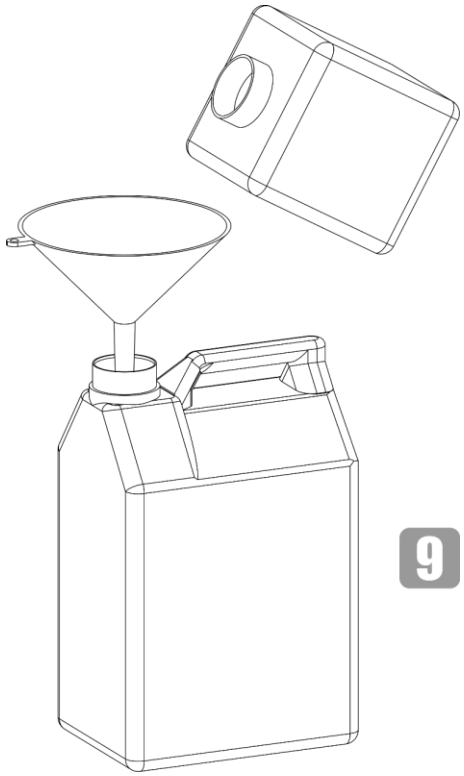

Fig. 28

10) Fill the jerry can with the exact fog fluid. Do not mix different types of fog fluid. Make sure that you do not overfill.

11) Put the fluid tank back in the device, as shown in Fig. 29.
12) Screw the lid back on the fluid tank, as shown in Fig. 30.

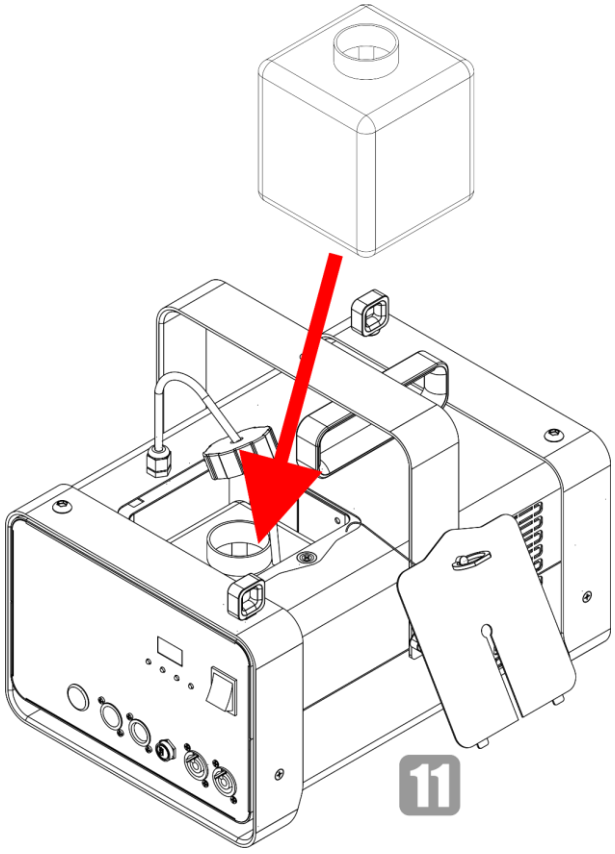

Fig. 29

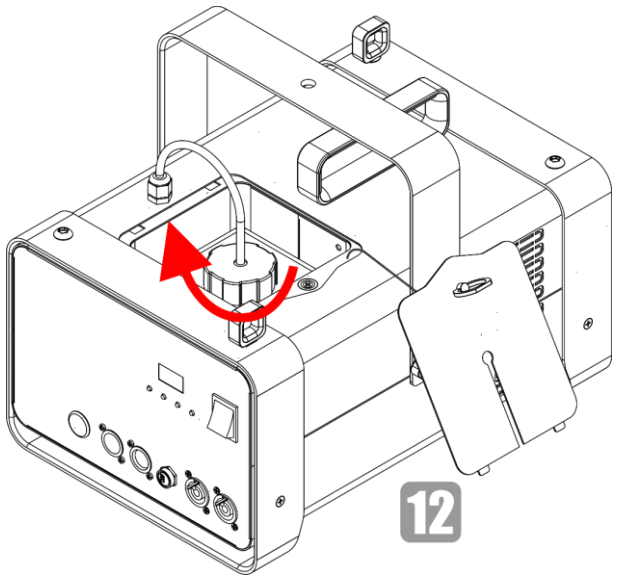

Fig. 30

13) Put the lid back on the device, as shown in Fig. 31.
14) Close the service lid, as shown in Fig. 32.

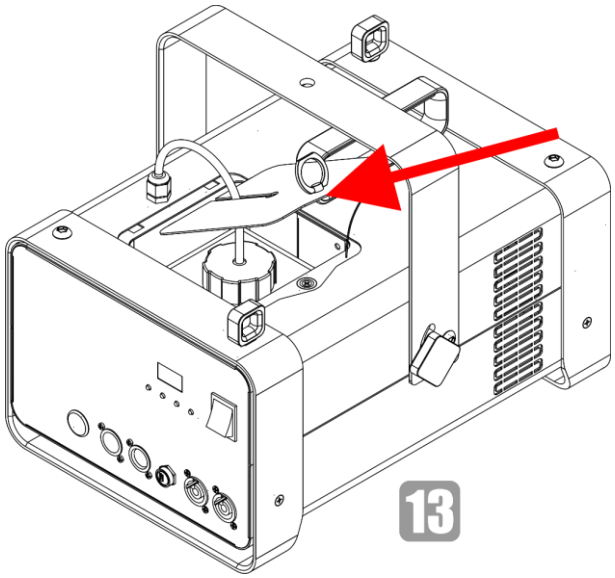

Fig. 31

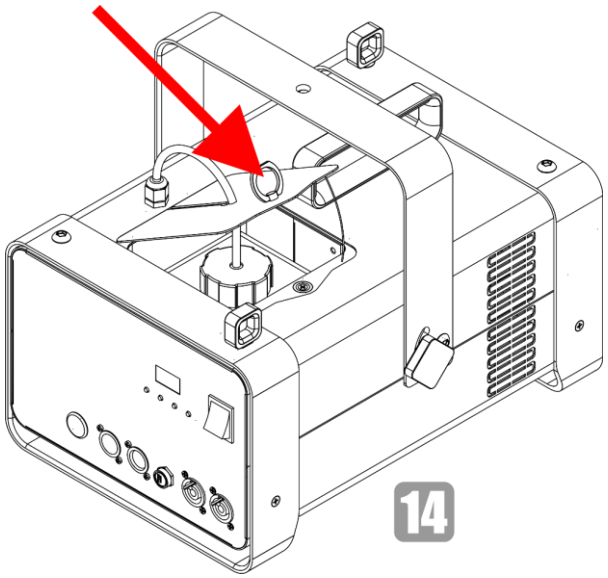

Fig. 32

Notes:
Do not allow the fog liquid to become contaminated. Always replace the caps on the fog liquid container and the fog machine liquid tank immediately after filling.

6.5. Restarting the Device after Running the Tank empty

When running a tank completely empty, the pump will automatically stop fogging to prevent damage to the pump. The display will show:



01) If you refill the tank and try to operate the device, the display will keep displaying this Warning message.
02) Make sure you fill the entire tank, let the device reheat and then manually start fogging. This will take a few seconds until the completely emptied lines are filled with fog fluid.

6.6. Control Modes

The QubiQ S2500 supports the following control modes:

- Manual (fog intensity, duration, timer)
- Manual via Remote control (fog intensity, duration, timer)
- 1 DMX channel

For more information about how to connect the devices, refer to **5. Setup** on pages 18–20.

6.7. Manual Operation

To set up the device, follow the steps below:

01) Fill the tank (Fluid Tank Capacity 2,3 L). See **6.3. Filling the Tank** on page 22 for more information.
02) Connect the power cable before supplying power to the device. See **4.5. Connecting to Power Supply** on page 17 for more information.
03) Set the **ON/OFF switch (08)** to ON.
04) Wait for the device to heat up. This will take a maximum of 3 minutes.
When the device is not 100 % heated you cannot view the menu or change the settings.

To operate the device manually as a stand-alone device:

- Adjust the output volume in Output Vol menu. See **6.7.4.2. Output Volume** on page 32 for more information.
- Adjust the Interval volume in Interval menu. See **6.7.4.3. Interval** on page 32 for more information.
- Adjust the Duration volume in Duration menu. See **6.7.4.4. Duration** on page 33 for more information.

Notes:

- You cannot constantly fog @100 % until the tank is empty.
In order to constantly fog, you have to adjust the output volume to 40 %. Only then will the device keep fogging until the tank is completely empty.
- The remote control always has priority over manual operation with the control panel on the device.
You are not able to use the buttons on the device, when the remote is plugged in.

6.7.1. Control Panel (Device)

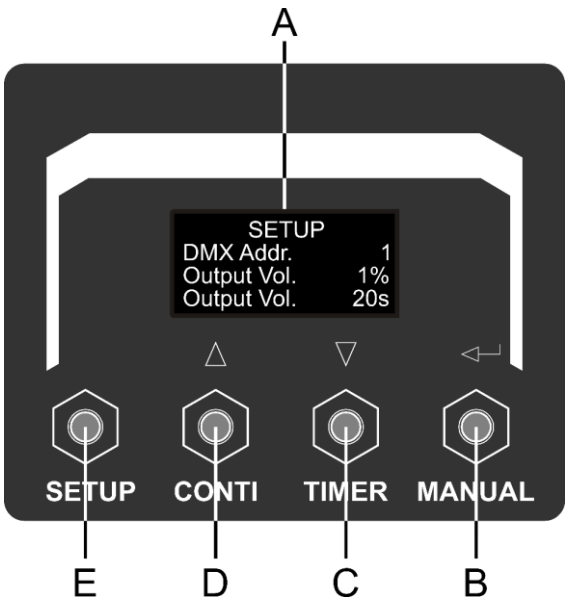

A) LCD display
B) MANUAL / ENTER button
C) TIMER / DOWN button
D) CONTI / UP button
E) SETUP button

Fig. 33

- Use the **MANUAL** / **ENTER** button to save your settings.
- Use the **CONTI** / **UP** and **TIMER** / **DOWN** buttons to increase/decrease numeric values.
- Use the **SETUP** button to navigate through the menus.

6.7.2. Start-up

Upon start-up, the display will show the current software version and the temperature.



Before you are able to see the main menu or change settings, you have to wait until the device is fully heated. The display will show:

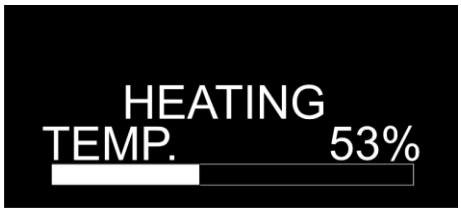

Before you are able to see the main menu or change settings, you have to wait until the device is fully heated. The display will show:

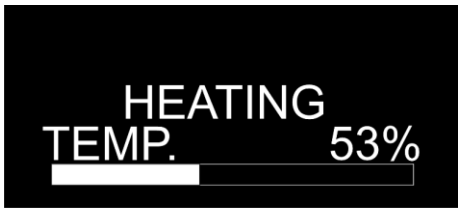

6.7.3. Menu Overview (Device)

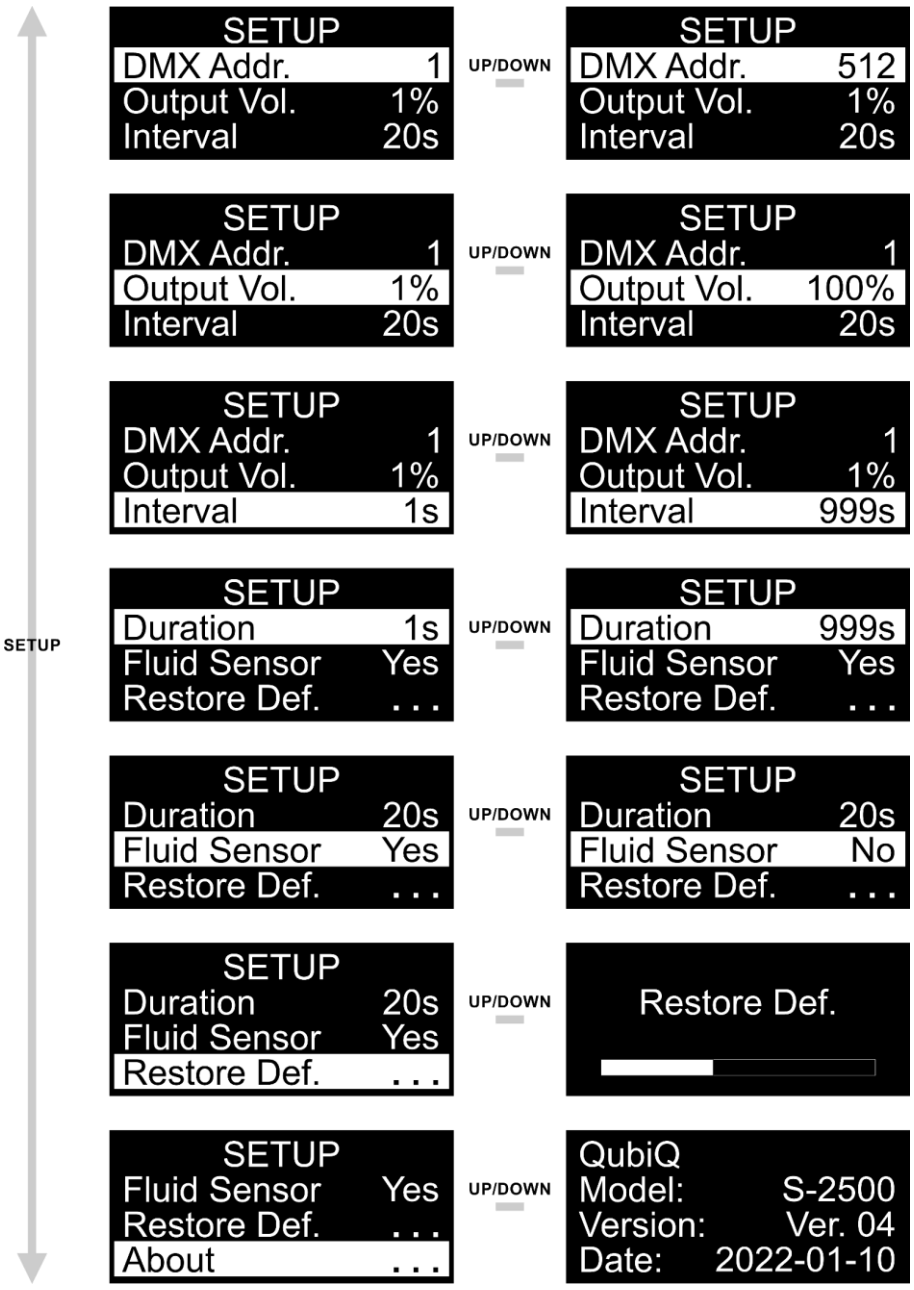

Notes:

- The remote control always has priority over manual operation with the control panel on the device. You are not able to use the buttons on the device, when the remote is plugged in.
- Do not connect the DMX cables and the remote control cable to the device at the same time. This will cause data collisions.

6.7.4. Main Menu Options (Device)

The main menu has the following options:

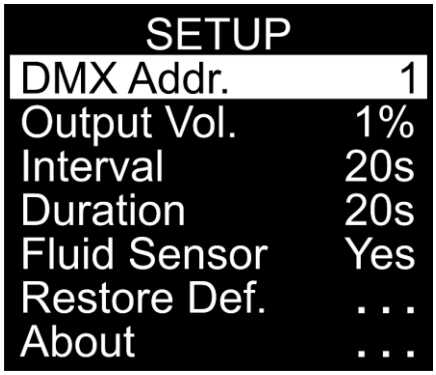

Press the **SETUP** button to navigate through the main menu.

6.7.4.1. DMX Address

In this menu you can set the DMX address.



Press the **UP**/**DOWN** buttons to set the desired DMX address. The adjustment range is 001–512.

6.7.4.2. Output Volume

In this menu you can manually set the output volume.



Press the **UP**/**DOWN** buttons to set the desired Output volume. The adjustment range is 1–100%.

6.7.4.3. Interval

In this menu you can set the fog interval.



Press the **UP**/**DOWN** buttons to set the desired interval time. The adjustment range is 1–999 sec.

6.7.4.4. Duration

In this menu you can set the duration of the fog output.

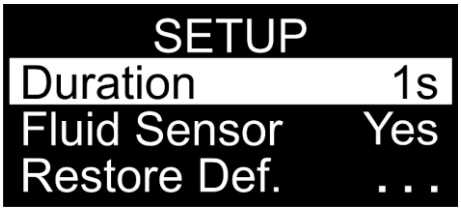

Press the **UP/DOWN** buttons to set the desired duration of your fog output. The adjustment range is 1–999 sec.

6.7.4.5. Fluid Sensor

In this menu you can set the Fluid Sensor.

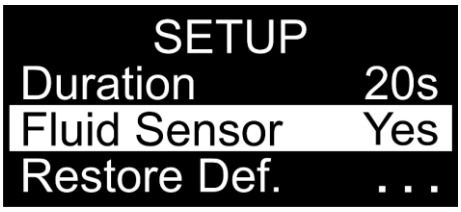

Press the **UP/DOWN** buttons to select one of the following 2 options:

- Yes: Sensor is on.
- NO: Sensor is off.

6.7.4.6. Restore Default

In this menu you can restore the default factory settings.

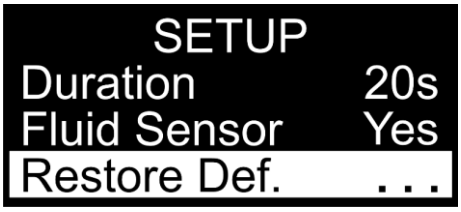

Press the **UP/DOWN** buttons to restore the default factory settings.

6.7.4.7. About

In this menu you can view the device's model, the current software version and the software date.

Press the **UP/DOWN** buttons to see the current software version. The display will show.

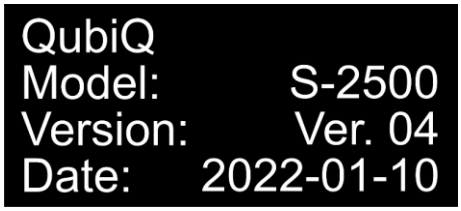

6.8. Manual Operation with Remote Control

To set up the device, follow the steps below:

01) Fill the tank (Fluid Tank Capacity 2,3 L). See **6.3. Filling the Tank** on page 22 for more information.
02) Connect the remote control cable to the device.
03) Connect the power cable before supplying power to the device. See **4.5. Connecting to Power Supply** on page 17 for more information.
04) Set the **ON/OFF switch (08)** to ON.
05) Wait for the device to heat up. This will take a maximum of 3 minutes.
When the device is not 100 % heated you cannot view the menu or change the settings.

To operate the device manually as a stand-alone device:

- Adjust the output volume in Output Vol menu. See **6.8.4.2. Output Volume** on page 38 for more information.
- Adjust the Duration volume in Duration menu. See **6.8.4.3. Duration** on page 38 for more information.
- Adjust the Interval volume in Interval menu. See **6.8.4.4. Interval** on page 38 for more information.

Notes:

- You cannot constantly fog @100 % until the tank is empty.
In order to constantly fog, you have to adjust the output volume to 40 %. Only then will the device keep fogging until the tank is completely empty.
- The remote control always has priority over manual operation with the control panel on the device. You are not able to use the buttons on the device, when the remote is plugged in.

6.8.1. Remote Control

The device can be controlled with a remote control.

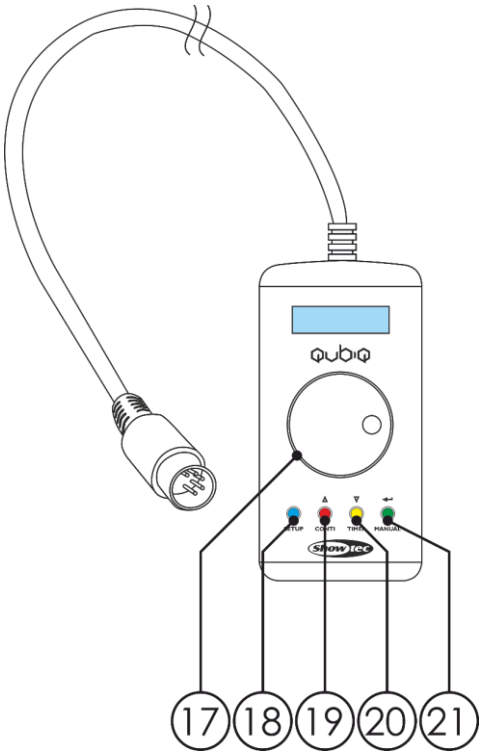

Fig. 34

	Button	Function	Description
17		Increase/Decrease	Scroll through the Menu / Press control wheel to Save
18		Setup	Scroll through the Menu
19		Plus / Conti	Increase value / Continuous output
20		Minus / Timer	Decrease value / Timer
21		Enter / Manual	Enter / Manual Fog output

6.8.2. Start up (Remote Control)

Upon start-up, the display of the remote control will show the current software version and the temperature.



Before you are able to see the main menu or change settings, you have to wait until the device is fully heated. The display will show:



6.8.3. Main Menu (Remote Control)

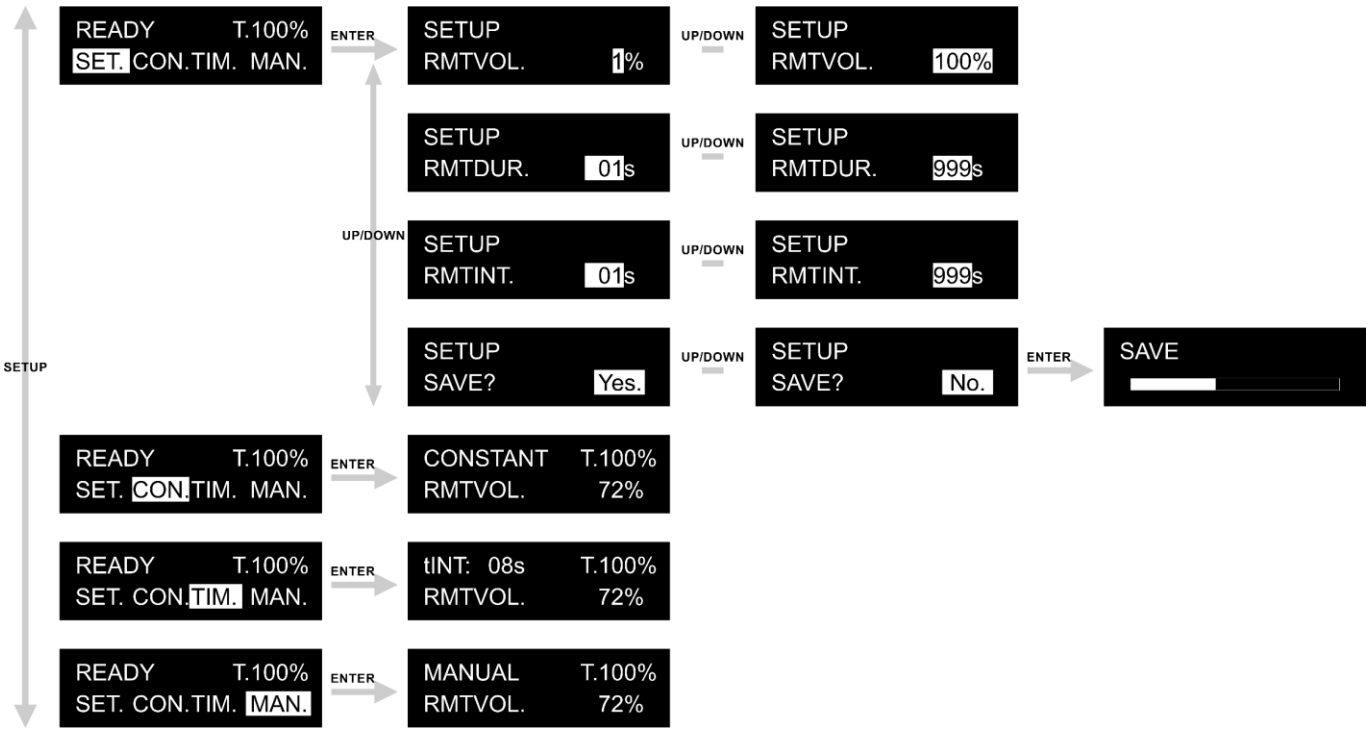

Notes:

- The remote control always has priority over manual operation with the control panel on the device. You are not able to use the buttons on the device, when the remote is plugged in.

6.8.4. Menu Overview (Remote Control)

The main menu has the following options:









01) Press the **UP/DOWN** buttons or turn the **CONTROL WHEEL** to navigate through the main menu.
02) Press the **SETUP** button or the **CONTROL WHEEL** to open the submenus.

6.8.4.1. Setup

In this menu you can set the output volume, duration and interval for the fog output.

01) Press the buttons or turn the **CONTROL WHEEL** to select the parameter.
02) Press the green **ENTER / MANUAL** button to confirm the selection and open the submenu.
03) Press the **UP/DOWN** buttons or turn the **CONTROL WHEEL** to increase/decrease the values:

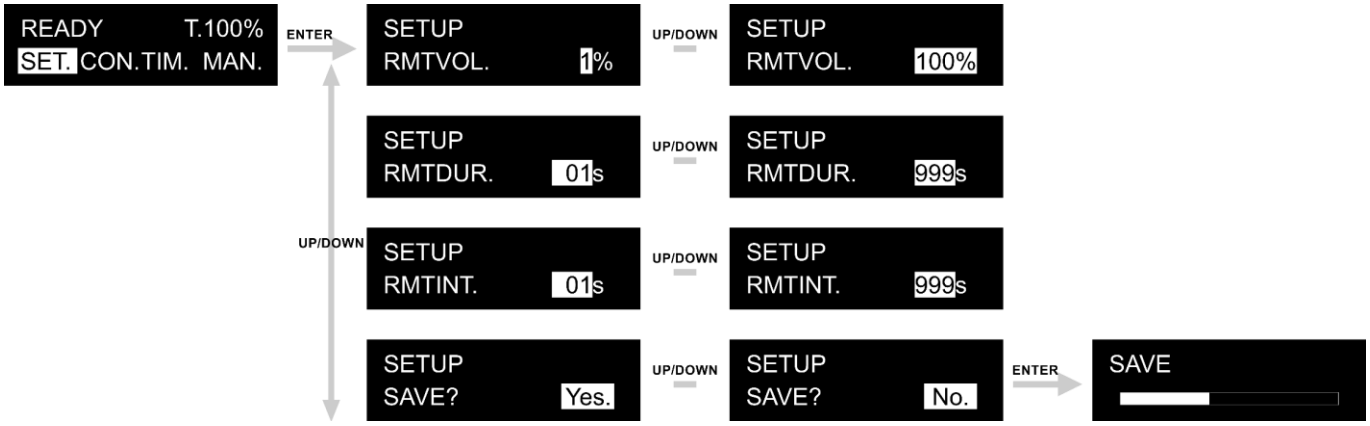

- RMTVOL: Set the intensity of the output volume. The adjustment range is 1–100%, from low to high output. See **6.8.4.2. Output Volume** on page 38 for more information.
- RMTDUR: Set the duration of the output. The adjustment range is 01–999 sec. See **6.8.4.3. Duration** on page 38 for more information.
- RMTINT: Set the interval of the output. The adjustment range is 01–999 sec. See **6.8.4.4. Interval** on page 38 for more information.

6.8.4.2. Output Volume

In this menu you continuously fog.

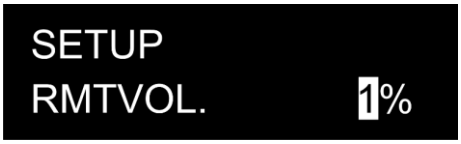

Press the **UP/DOWN** buttons or turn the **CONTROL WHEEL** to increase / decrease the output volume. The adjustment range is 1–100%.

6.8.4.3. Duration

In this menu you can set the duration of the fog output.



Press the **UP/DOWN** buttons or turn the **CONTROL WHEEL** to increase / decrease to set the desired duration of your fog output. The adjustment range is 1–999 sec.

6.8.4.4. Interval

In this menu you can set the fog interval.



Press the **UP/DOWN** buttons or turn the **CONTROL WHEEL** to increase / decrease the interval time. The adjustment range is 1–999 sec..

6.8.4.5. Save

In this menu you can set the save the settings.



Press the **UP/DOWN** buttons to select one of the following 2 options:

- YES: Your settings will be saves.
- NO: Your settings will not be saved.

6.8.4.6. Continuous Output

In this menu you continuously keep fogging until the tank is empty.

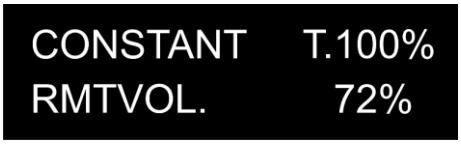

01) Press the red **PLUS / CONTI** button or press the **CONTROL WHEEL** to immediately start fogging at the preset volume. To change the volume, see **6.8.4.2. Output Vol** on page 38 for more information.
02) If you want to stop continuously fogging, press the red **PLUS / CONTI** button or press the **CONTROL WHEEL** again.

Notes:

- You cannot constantly fog @100% until the tank is empty.
  In order to constantly fog, you have to adjust the output volume to 40%. Only then will the device keep fogging until the tank is completely empty.

6.8.4.7. Timer / Interval

In this menu you can set the fog timer and determine the interval.

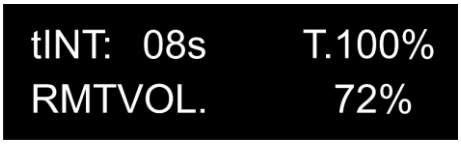

01) Press the yellow **MINUS / TIMER** button or press the **CONTROL WHEEL** to start your timer program. To change the interval time, see **6.8.4.4. Interval** on page 38 for more information.
02) If you want to stop the fog timer, press the yellow **MINUS / TIMER** button or press the **CONTROL WHEEL** again.

6.8.4.8. Manual Output

In this menu you can manually start fogging.

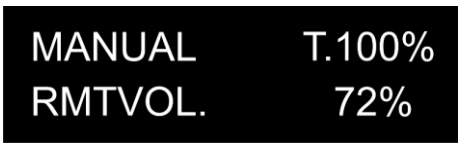

01) Press the green **ENTER / MANUAL** button or press the **CONTROL WHEEL** to immediately start fogging at the preset volume. To change the volume, see **6.8.4.2. Output Vol** on page 38 for more information.
02) If you release the green **ENTER / MANUAL** button or release the **CONTROL WHEEL** the device will immediately stop fogging.

6.9. DMX Operation

To setup up the device, follow the steps below:

01) Fill the tank (Fluid Tank Capacity 2,3 L). See **6.3. Filling the Tank** on page 22 for more information.
02) Connect the DMX cables before supplying power to the device. See **5.3. DMX Connection** on page 18 for more information
03) Connect the power cable before supplying power to the device. See **4.5. Connecting to Power Supply** on page 17 for more information.
04) Set the **ON/OFF switch (08)** to ON.
05) Wait for the device to heat up. This will take a maximum of 3 minutes. When the device is not 100 % heated you cannot view the menu or change the settings.
06) Set the DMX starting address of the device in Address menu. See **5.3.4. DMX Addressing** on page 20 and **6.7.4.1. Address** on page 32.

Notes:

- You cannot constantly fog @100% until the tank is empty.
  In order to constantly fog, you have to adjust the output volume to 40%. Only then will the device keep fogging until the tank is completely empty.
- The remote control always has priority over manual operation with the control panel on the device. You are not able to use the buttons on the device, when the remote is plugged in.

6.9.1. DMX Channels

1 CH	Function	Value	Setting
1	**Output**	000–255	Fog output 0-100%

7. Troubleshooting

This troubleshooting guide contains solutions to problems which can be carried out by an ordinary person. The device does not contain user-serviceable parts.

Unauthorized modifications to the device will render the warranty void. Such modifications may result in injuries and material damage.

Refer servicing to instructed or skilled persons. Contact your Highlite International dealer in case the solution is not described in the table.

Problem	Probable cause(s)	Solution
The device does not function at all	No power to the device	• Check if power is switched on and cables are plugged in
	Main fuse is blown	• Replace the fuse. See **8.3.1. Replacing the Fuse** on page 44
The device responds erratically	The factory settings of the device are changed	• Reset the device's parameters to the default factory settings. See **6.7.4.6. Restore Default** on page 33
The device does not respond to DMX control	The controller is not connected	• Connect the controller
	The signal is reversed. The 3-pin/5-pin DMX OUT of the controller does not match the DMX IN of the device	• Install a phase-reversing cable between the controller and the device
	The controller is defective	• Try using another controller
The device responds erratically to DMX control	Bad data link connection	• Examine connections and cables. Correct poor connections. Repair or replace damaged cables
	The data link is not terminated with a 120 Ω termination plug	• Insert a termination plug in the DMX OUT connector of the last device on the link
	Incorrect addressing	• Check address settings and correct, if necessary
	In case of a setup with multiple devices, one of the devices is defective and disturbs data transmission on the link	• To find out the defective device, bypass one device at a time until normal operation is restored
No fog output	Device is too hot	• Allow device to cool down. • Make sure that air vents are not blocked.
	The device is damaged	• Disconnect the device and contact your Highlite International dealer
	The power supply settings do not match local AC voltage and frequency	• Disconnect the device. Check the settings and correct, if necessary
	The fluid pipes or the **fog output nozzle (06)** are clogged.	• Clean the fluid pipes. See **8.2.1. Basic Cleaning Instructions** and **8.2.2. Cleaning the Fluid Pipes** on page 43
	Incompatible fog fluid	• Use the recommended fog fluid. See **6.2. Recommended Fog Fluid** on page 21
Fog output nozzle is sputtering	Incompatible fog fluid	• Use the recommended fog fluid. See **6.2. Recommended Fog Fluid** on page 21
Device does not function correctly. (Error message: Fluid Lack!)	Tank is empty	• Fill the tank. See **6.3. Filling the Tank** on page 22
	Fluid pipes are empty	• Restart the device. See **6.5. Restarting the Device after Running the Tank empty** on page 28

8. Maintenance

8.1. Safety Instructions for Maintenance



DANGER
Electric shock caused by dangerous voltage inside

Disconnect power supply before servicing or cleaning.



WARNING
Risk of burns due to hot surface

Allow the device to cool down for at least 15 minutes before servicing or cleaning.

8.2. Preventive Maintenance



Attention
Before each use, examine the device visually for any defects.

Make sure that:

- All screws used for installing the device or parts of the device are tightly fastened and are not corroded.
- The safety devices are not damaged.
- There are no deformations on housings, fixations and installation points.
- The lens is not cracked or damaged.
- The power cables are not damaged and do not show any material fatigue.

8.2.1. Basic Cleaning Instructions

The device must be cleaned periodically from the built-up dust and fog fluid residues.

To clean the device, follow the steps below:

01) Disconnect the device from the electrical power supply.
02) Allow the device to cool down for at least 1 hour.
03) Remove the dust collected on the external surface with dry compressed air and a soft brush.
04) Clean the fog fluid residues from the **fog output nozzle (06)** with a damp cloth. Use only a clean, lint-free soft cloth.
05) Clean the DMX and other connections with a damp cloth.



Attention

- Do not immerse the device in liquid.
- Do not use alcohol or solvents.
- Make sure that the connections are fully dry before connecting the device to the power supply and to other devices.

8.2.2. Cleaning the Fluid Pipes

The device must be cleaned periodically from the fog fluid residues. After every 40 hours of continuous operation, it is recommended to run a cleaning solution composed of 80 % distilled water and 20 % white vinegar through the system.

To clean the device, follow the steps below:

01) Disconnect the device from the electrical power supply.
02) Allow the device to cool down for at least 1 hour.
03) Clean out debris with vinegar and a pipe cleaner, making sure that the **fog output nozzle (06)** is free of clogs.
04) Remove all fog liquid from the tank. See **6.4. Emptying the Tank after operation** on page 25 for more information.
05) Add a cleaning solution to tank.
06) Connect the power cable before supplying power to the device. See **4.5. Connecting to Power Supply** on page 17 for more information.
07) Make sure that you run the device until tank is empty.
08) Make sure that you use the device in spaces that have good airflow.
09) Repeat this 2-4 times.
10) Refill with fog liquid.

8.3. Corrective Maintenance

The device does not contain user-serviceable parts. Do not open the device and do not modify the device.

Refer repairs and servicing to instructed or skilled persons. Contact your Highlite International dealer for more information.

8.3.1. Replacing the Fuse



DANGER
Electric shock caused by short-circuit

- Do not bypass the thermostatic switch or fuses.
- For replacement use fuses of the same type and rating only.

Power surges, short-circuit or incorrect electrical power supply may cause a fuse to burn out. If the fuse burns out, the device will not function anymore. If this happens, follow the steps below.

01) Disconnect the device from the electrical power supply.
02) Allow the device to cool down for at least 15 minutes.
03) Loosen the fuse cover with a screwdriver and remove the fuse holder.
04) If the fuse is brown or unclear, it is burned out. Remove the old fuse.
05) Insert a new fuse in the fuse holder. Make sure that the type and the rating of the replacement fuse are the same as the ones specified on the information label of the product.
06) Replace the fuse holder in the opening and tighten the fuse cover.

9. Deinstallation, Transportation and Storage

9.1. Instructions for Deinstallation

WARNING
Incorrect deinstallation can cause serious injuries and damage of property.

- Let the device cool down before dismounting.
- Disconnect power supply before deinstallation.
- Always observe the national and site-specific regulations during deinstallation and derigging of the device.
- Wear personal protective equipment in compliance with the national and site-specific regulations.

9.2. Instructions for Transportation

- Make sure that the liquid tank is empty before transportation.
- Use the original packaging to transport the device, if possible.
- Always observe the handling instructions printed on the outer carton box, for example: “Handle with care”, “This side up”, “Fragile”.

9.3. Storage

- Make sure that the liquid tank is empty before storing the device. See **6.4. Emptying the Tank after operation** on page 25 for more information.
- Clean the device before storing. Follow the cleaning instructions in chapter **8.2.1. Basic Cleaning Instructions** on page 43, and **8.2.2. Cleaning the Fluid Pipes**.
- Store the device in the original packaging, if possible

10. Disposal

Correct disposal of this product

Waste Electrical and Electronic Equipment

This symbol on the product, its packaging or documents indicates that the product shall not be treated as household waste. Dispose of this product by handing it to the respective collection point for recycling of electrical and electronic equipment. This is to avoid environmental damage or personal injury due to uncontrolled waste disposal. For more detailed information about recycling of this product contact the local authorities or the authorized dealer.

11. Approval

Check the respective product page on the website of Highlite International (www.highlite.com) for an available declaration of conformity.

©2022 Showtec