0230-0354rC

PO BOX 4394
SANTA ROSA, CA
95402 USA

P (707) 525-9941
F (707) 575-7046
EMGPICKUPS.COM

X-SERIES

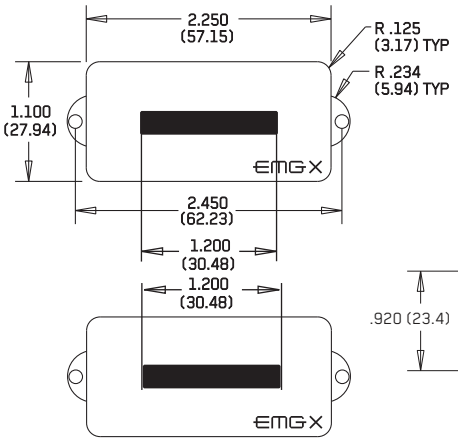

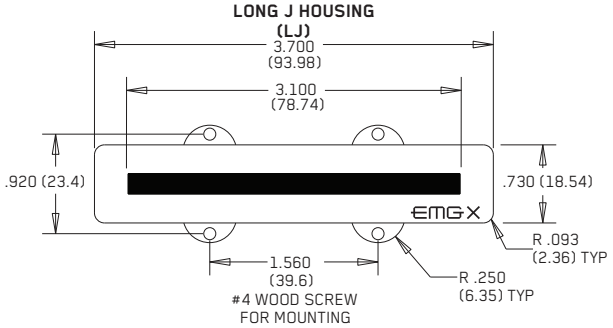

INSTALLATION INFORMATION
EMG MODELS: PJ-X/PJA-X AND PJCS-X SET

SPECIFICATIONS:

	MODEL: PX	LJX	PAX	LJAX	PCSX	LJCSX
Logo Color	Silver	Silver	Gold	Gold	Silver	Silver
Magnet Type *	C	C	A	A	C/S	C/S
Resonant Frequency (KHz)	3.20	4.05	2.61	3.48	2.61	3.48
Output Voltage (String)	2.00	2.00	2.00	1.75	2.00	1.75
Output Voltage (Thump)	8.50	8.00	8.50	6.50	8.50	6.50
Output Noise (60 Hz)	-106	-105	-101	-101	-101	-101
Output Impedance (Kohm)	2.00	2.00	2.00	2.00	2.00	2.00
Current @9V (Microamps)	80	80	80	80	80	80
Battery Life (Hours)	3000	3000	3000	3000	3000	3000
Maximum Supply (Volts DC)	27	27	27	27	27	27

*Note: Magnet Type: A (Alnico) C (Ceramic) CS (Ceramic and Steel)

INSTALLATION NOTES:

All EMG Pickups are compatible with each other. EMG accessories, the VLPF, EXG, SPC or RPC Controls can be added to any EMG Pickup System without requiring an extra battery. DO NOT reconnect the bridge ground wire, EMG Pickups do not require string grounding. Use the 25K Ohm controls that are included for best results. If your output jack is a long panel style you will need a stereo jack, use a SwitchCraft 152B , soldering will be required (see the bottom of page 2). Adjust the pickup level to the strings, and at a distance that works for you, experiment. Alternate wiring diagrams are available at; emgpickups.com.

INCLUDED WITH EACH SET:

2 VOLUME CONTROLS (25K)

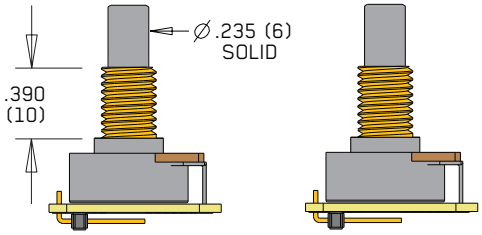

1 ACTIVE TONE CONTROL

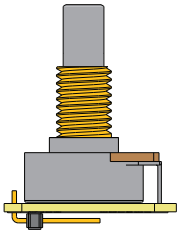

PICKUP CABLE 13.5" (34cm)

PICKUP CABLE 9" (23cm)

4 CONNECT CABLES 5.5" (14cm)

OUTPUT CABLE 6" (15cm)

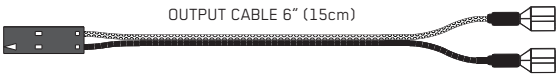

SUPPLY CABLE 5.5" (14cm)

BATTERY CABLE 7" (18cm)

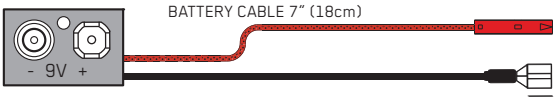

ADJUSTMENT SCREWS (8)

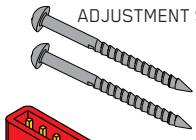

BATTERY BUSS

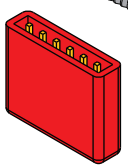

2 PICKUP IN/ OUT BATTERY BUSS

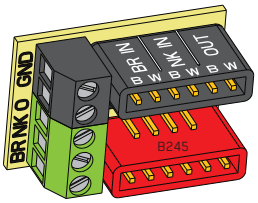

STEREO OUTPUT JACK

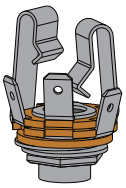

WARRANTY

All EMG Pickups and accessories are warranted for a period of two years. This warranty does not cover failure due to improper installation, abuse or damage. If upon examination the pickup is determined to be defective, a replacement will be made. Warranty replacement products are covered by this same warranty. This warranty covers only those pickups and accessories sold by authorized EMG Dealers. This warranty is not transferable.

© 2019 Copyright EMG INC. All Rights Reserved.

Installation Instructions:

EMG Models: EMG PJ-X, PJA-X, PJCSX SETS

General Notes:

Every attempt has been made to make this a solderless installation.
There are some instances where this is not possible;

1) If your instrument uses the long panel output jack and you had passive pickups you will need a new stereo output jack, the Switchcraft 152B is recommended. Soldering to the new jack will be required, see page 3.
2) Power Supply tips are on page 4. If your instrument has a battery holder, you are installing this pickup with an older EMG, or you want to supply your instrument with +18 Volts, see page 4 for tips to avoid soldering.

Diagram #1
Insert the plug onto the 3-pin header of the pickup as shown above.
Note the orientation arrow.

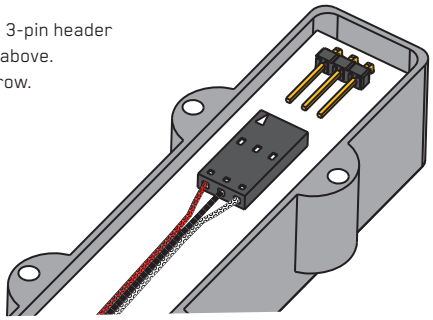

Installation Instructions:

2 Pickups, 2 Volume controls, VLPF Active Master Tone, no selection switch
PJ-Bass Style wiring
Refer to Diagram #2

1) Install the Pickups and route the Pickup cables to the control cavity. If the cables are too long, keep any excess under the pickup.
2) Mount the Volume and Tone controls into the body / pickguard. Plug the Neck Pickup Cable onto the Neck Volume control. Plug the Bridge Pickup Cable onto the Bridge Volume control.
3) Plug a connect cable from the Neck Volume control to the Bridge Volume control.
4) Plug a connect cable from the Bridge Volume control to the VLPF Tone control.
5) Plug the output cable from the VLPF Tone control and connect the output wires to the output jack by pushing the connectors on as shown.
   WHITE wire onto the TIP (T) contact,
   BLACK wire onto the SLEEVE (S) contact
   BLACK Battery Negative wire onto the RING (R) contact.
6) Plug the RED Wires of the pickups onto the V+ Supply Buss (RED Shroud) along with the RED of the battery clip. Extra pins on the V+ Supply Buss are for EMG Accessories.
7) Wrap the battery in insulating foam and place it securely in the control cavity. We suggest that you plug in the instrument and test it before closing the control cavity.

Diagram #1a

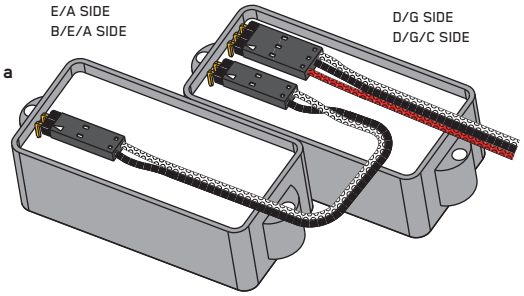

Diagram #2
Volume / Volume
Master Tone (Active)

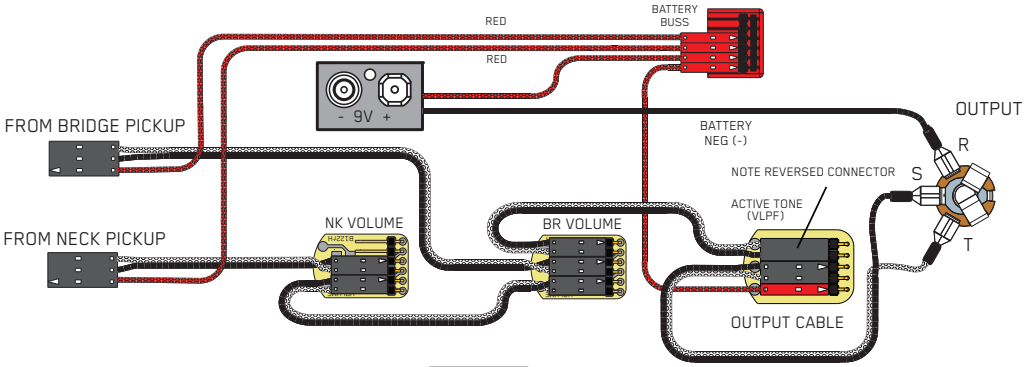

Diagram #3
B118 Active Balance Control
Active Tone / Master Volume

This installation can be used for instruments with 3 control positions like the diagram above, but use a Balance control instead of 2 Volume controls. The VLPF Active Tone Control shown in this diagram can be replaced with the EMG-EXB Expander, EMG-BTC Control (Active Bass and Treble EQ) or the VMC.

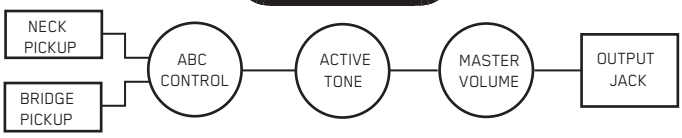

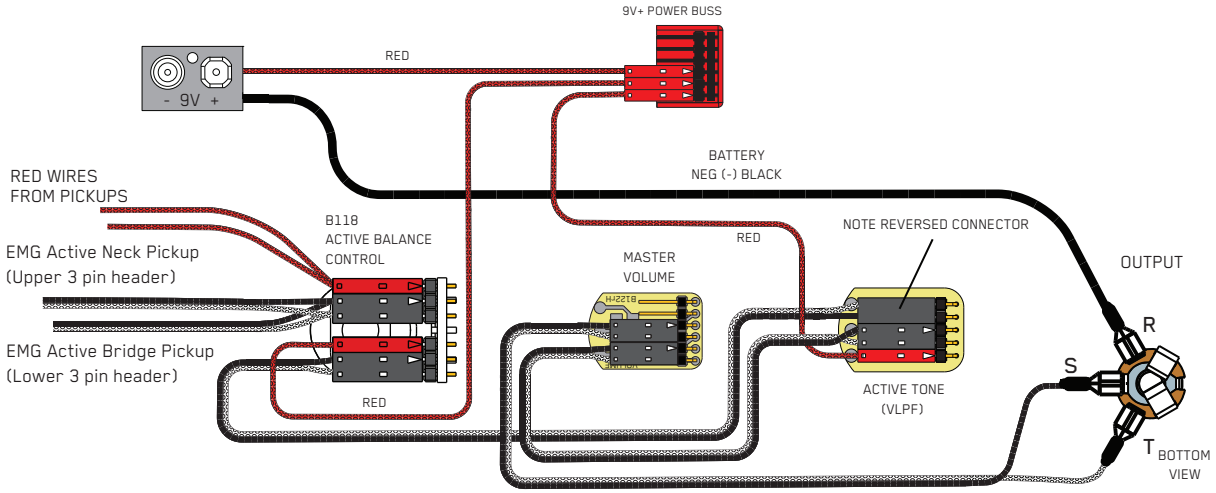

Diagram #4

Soldering to the 152B Panel Jack:

If your instrument has a long Panel Jack like the one below you will have to solder the output cable as shown.
Ground (Black) to the Sleeve
Signal (White) to the Tip
Battery Negative (Black) to the Ring

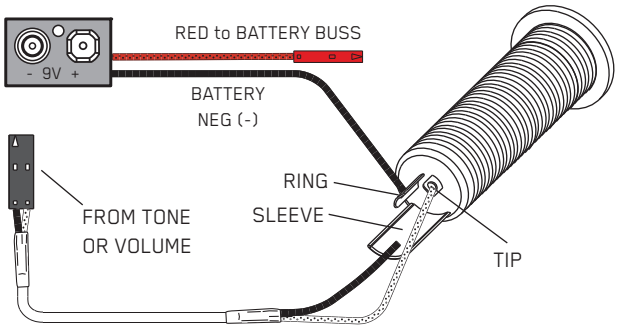

Diagram #5

Soldering to the battery buss:

If your instrument has an older EMG Pickup you can solder the pickup RED wire to the buss. Simply use some needle nose pliers, pull out the V+ header and solder the RED Wire from the pickup(s) to any of the pins and then re-insert the header into the housing.

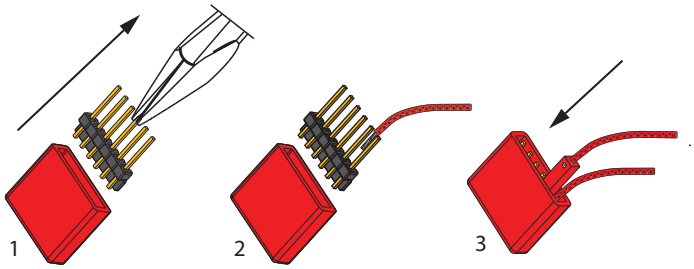

Installation Instructions:

EMG Models: EMG PJ-X, PJA-X, PJCSX SETS

If your instrument has a selection switch:
Shown at the right is the EMG B245 Pickup Buss which is used for instruments that have 2 pickups and a 3 position selection switch.
If you have a selection switch and want your installation to remain solderless, you'll need a B245 Buss.
Either send an e-mail to: sales@emgpickups.com
or call: 800 821-1446 to get the buss.

2 Pickups / Toggle Select Switch / Master Volume and Tone

1) Install the Pickups and route the Pickup cables to the control cavity.
   If the cables are too long, wind up the excess and keep it under the pickup.
2) Mount the Volume and Tone controls into the body.
   Plug both Pickup cables into the Pickup Buss (BLACK Shroud) as shown,
   Refer to Diagram #6a
   Bridge Pickup to Position 1
   Neck Pickup to Position 2.
3) Plug a connect cable from the Pickup Buss (Position 3) to the Master Tone (Active) as shown in Diagram #6b. Note the reversed connector on pins 1 and 2.
4) Plug a connect cable from the Master Tone (ACTIVE) to the Master Volume as shown.
5) Strip the insulation from the switch wires and Insert them into the GREEN Terminal Block and tighten the screws with a small screwdriver.
   The Bridge pickup goes to the BR Terminal
   The Neck pickup goes to the NK Terminal
   The Output of the switch goes to the O Terminal
   If there is a ground wire coming from the switch, insert it into one of the black terminals on the terminal block.
6) Plug the output cable onto the Master Volume control and connect the output wires to the output jack and push the connectors onto the jack as shown.
   WHITE wire onto the TIP (T) contact,
   BLACK wire onto the SLEEVE (S) contact
   BLACK Battery Negative wire onto the RING (R) contact.
7) Plug the RED Wires of the pickups onto the V+ Supply Buss (RED Shroud) along with the RED of the battery clip, and the RED wire of the Active Tone Control. Extra pins on the V+ Supply Buss are for EMG Accessories.
8) Wrap the battery in insulating foam and place it securely in the control cavity. We suggest that you plug in the instrument and test it before closing the control cavity.

Diagram #6a

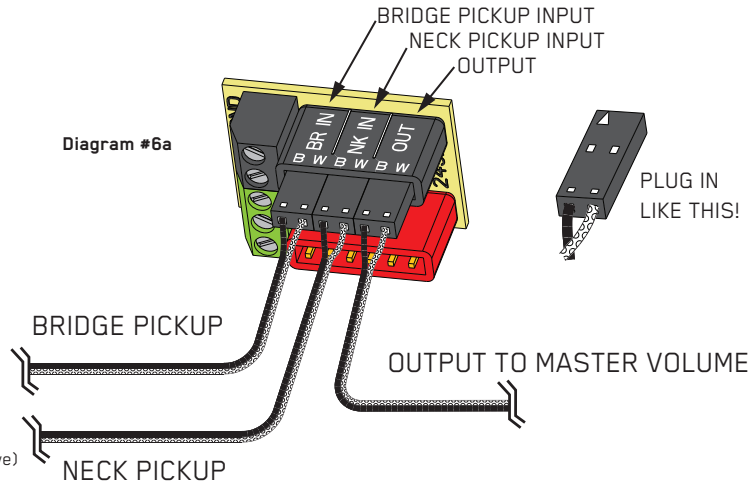

Diagram #6b
2 Pickups
Toggle Style Select Switch
Master Volume & Master Tone

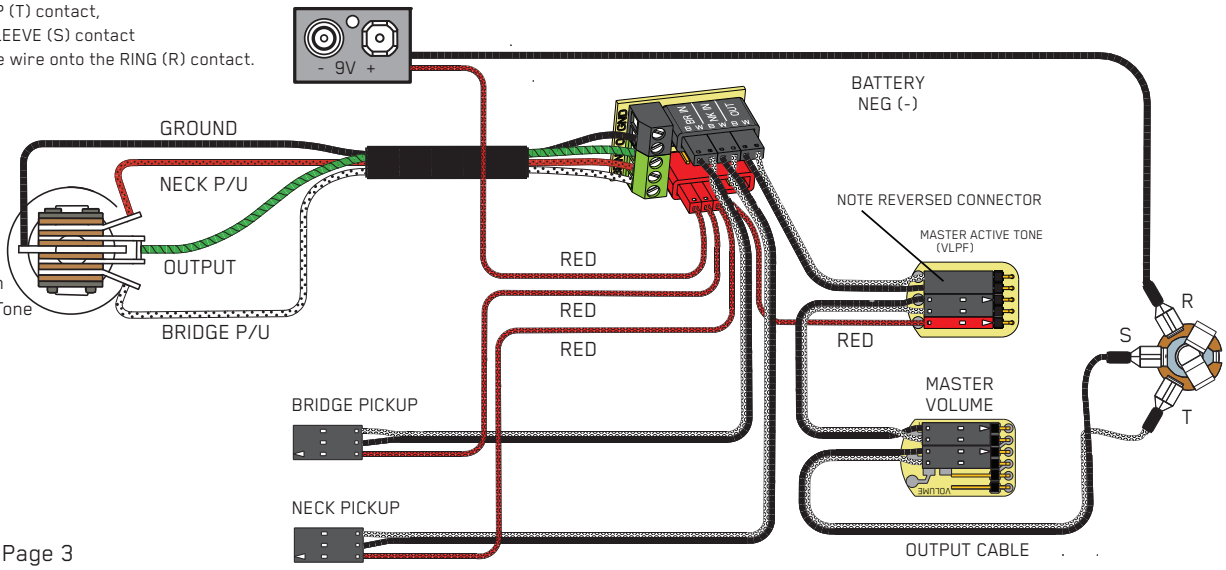

Refer to Diagram #7

1) Install the Pickups and route the cables to the control cavity.
   If the cables are too long, wind up the excess and keep it under the pickup.
2) Mount the Volume and Tone controls into the body.
   Plug both Neck and Bridge pickup cables onto the Volume Controls as shown.
3) Plug a connect cable from the Bridge (BR) Volume control to the (BR) Active Tone Control. Note the reversed connector on pins 1 and 2.
4) Plug a connect cable from the Neck (NK) Volume control to the (NK) Active Tone Control. Note the reversed connector on pins 1 and 2.
5) Plug a connect cable from the the (BR) Active Tone to Position #1 on the Pickup Buss.
6) Plug a connect cable from the the (NK) Active Tone to Position #2 on the Pickup Buss.
7) Strip the insulation from the switch wires and Insert them into the GREEN Terminal Block and tighten the screws with a small screwdriver.
   The Bridge pickup goes to the BR Terminal
   The Neck pickup goes to the NK Terminal
   The Output of the switch goes to the O Terminal
   If there is a ground wire coming from the switch, insert it into one of the black terminals on the terminal block.
8) Plug the output cable from the Pickup Buss (Position 3) to the output jack and push the connectors onto the jack as shown.
   WHITE wire onto the TIP (T) contact,
   BLACK wire onto the SLEEVE (S) contact
   BLACK Battery Negative wire onto the RING (R) contact.
9) Plug the RED Wires of the pickups onto the V+ Supply Buss (RED Shroud) along with the RED of the battery clip, and the RED wires from the Active Tone Controls.
10) Wrap the battery in insulating foam and place it securely in the control cavity. We suggest that you plug in the instrument and test it before closing the control cavity.

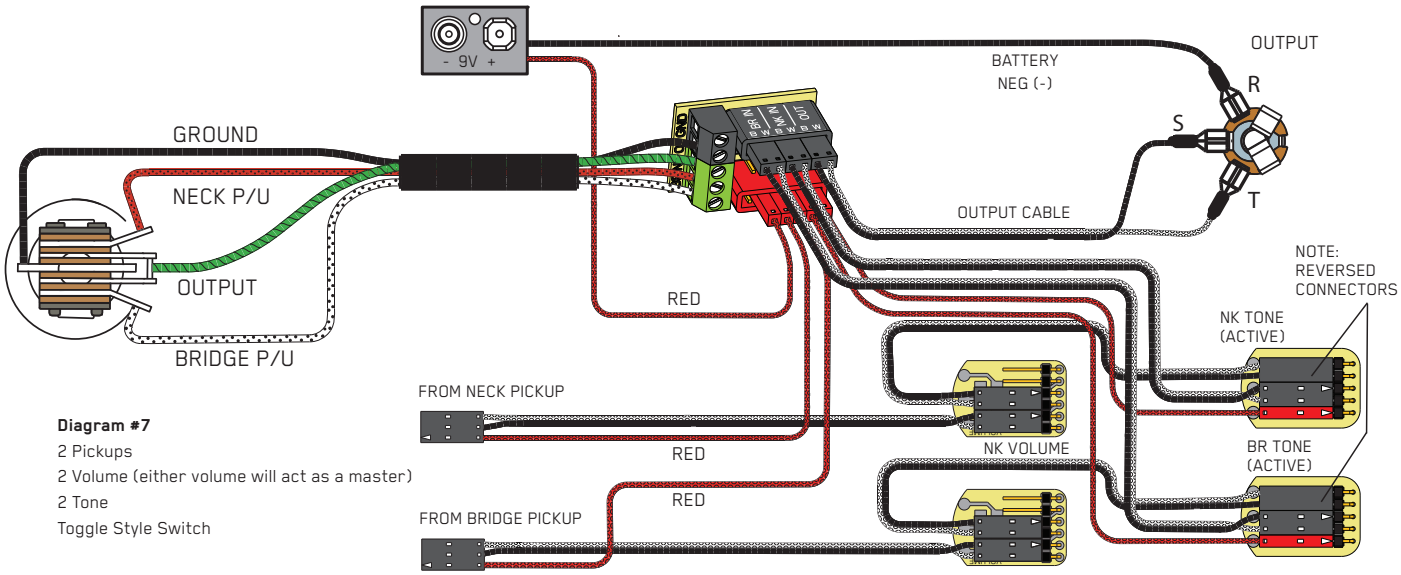

Diagram #7
2 Pickups
2 Volume (either volume will act as a master)
2 Tone
Toggle Style Switch

Diagram #8

If the instrument has a Battery Holder:

If your instrument has a 9 or 18 Volt battery holder you can still use the EMG Connectors to supply power to the pickups.
Simply cut and strip the wires from the battery clip provided.
Twist the wires together (Red to Red and Black to Black) and use the shrink tubing included to cover the connections.
Soldering the wires is recommended.

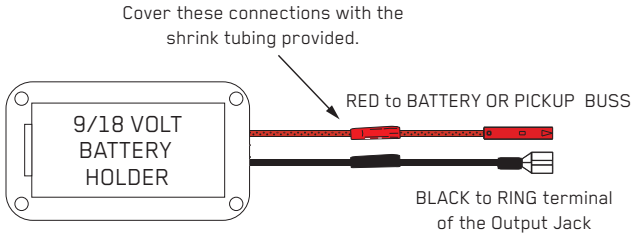

Diagram #9

+18 Volt Wiring Option:
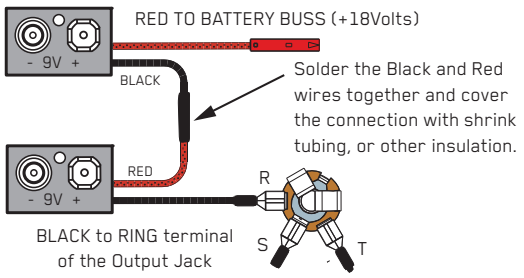
If you want to operate your instrument at +18 Volts for more headroom then use 2 batteries wired as below.
Also, if you are using any type of EQ in your instrument (EMG-BT, BQ) or anything that boosts the pickup signal then +18 Volts is recommended.