VCD70

Panel connector - bnc double female - metal - D-size

Product information:

D-Size BNC double female grounded connector (BNC ground, outer ring, is connected with D-size housing)

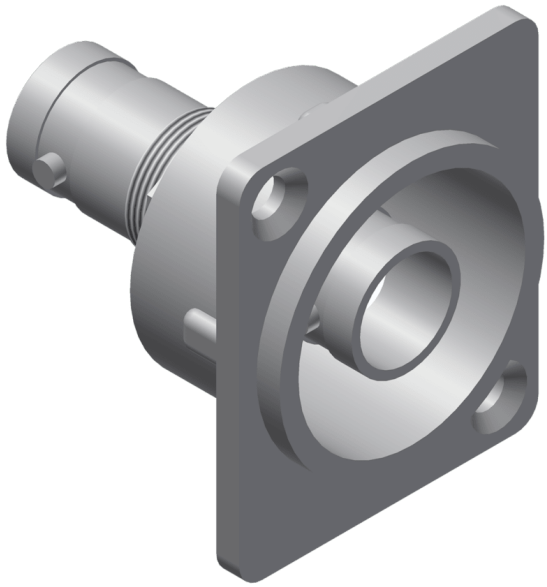

Product Features:

Application	AV & IT
	Rental & MI
Series	Bulk & Accessories

Variants:

- VCD70 - Connector

We reserve the right to change specifications without notice, this is part of our policy to continually improve our products.